ZOLOTO®
VALVES
since 1966

AN ISO 9001 CERTIFIED COMPANY

1055 Bronze Thermodynamic Steam Trap (Screwed) I.B.R

Salient Features

- Screwed Female Ends to BSPT.
- Provided with integral strainer for trouble free service.
- Stainless Steel (Type 304) Ø0.5 mm perforated sheet screen.
- Renewable 13% Cr. Stainless Steel (S.S 410) working parts.

Test Pressure (Hydrostatic) :
Shell : 35.15 kg/cm²g (500 psig)
Working Pressure (Steam) : 17.58 kg/cm²g (250 psig)
Maximum Working Temperature : 225°C

Suitable For
Steam

Materials

P.No.	Name of Part	Material of Construction	Specification	Quantity
1	Disc	Stainless Steel	ASTM A 276 Type 410	1
2	Cover	Stainless Steel	ASTM A 276 Type 410	1
3	Body	Bronze	IBR 282 (a) (iv) Gr. B	1
4	Screen (Ø0.5 mm Perforation)	Stainless Steel	Type 304	1
5	Gasket	Steam Jointing Sheet	IS 2712 Gr. W/3	1
6	Plug	Stainless Steel	ASTM A 276 Type 410	1
7	Seat	Stainless Steel	ASTM A 276 Type 410	1
8	Name Plate	Aluminium	– – –	1

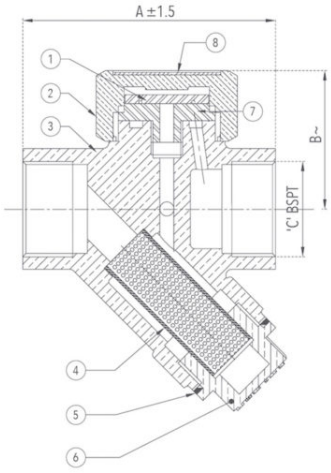

Sizes / Dimensions

Size (Inches)	Size (mm)	A ±1.5	B ~	C
1/2	15	78	52	1/2″
3/4	20	96	52	3/4″
1	25	120	63	1″

~ ±10

ZOLOTO INDUSTRIES
Zoloto House, 11th Milestone, Lambra, Nakodar Road,
Jalandhar – 144026. Punjab. INDIA
https://www.zolotovalves.com
Phones : +91 181 4676666 (100 Lines)
Facsimile: +91 181 2792500 & 2251600
Email : sales@zolotovalves.com, mktg@zolotovalves.com