ZOLOTO®
VALVES
since 1966

AN ISO 9001 CERTIFIED COMPANY

# 1001 Bronze Globe Valve (Screwed)

## Salient Features

- Screwed Female Ends to IS 554 / BS 21 / ISO 7.
- Screwed in Bonnet, Inside Screw, Rising Stem, Integral Seat.
- Designed sheet metal handwheel for a firm grip and convenient operation.
- Premium Quality PTFE Gland Packing.
- Medium Pattern.

Test Pressure (Hydrostatic) :
Shell : 20 kg/cm²g (285 psig)
Seat : 13.50 kg/cm²g (192 psig)
Maximum Working Temperature : 225°C

**Suitable For**
Water, Oil, Air*, Gases*
*Also available with PTFE Seating for Air and Gas applications, at a nominal extra price.

## Materials

| P.No. | Name of Part | Material of Construction | Specification | Quantity |
|---|---|---|---|---|
| 1 | Screw / Bolt | Carbon Steel (Zinc Plated) | - - - | 1 |
| 2 | Washer | Carbon Steel (Zinc Plated) | - - - | 1 |
| 3 | Handwheel | Sheet Metal (Powder Coated) | - - - | 1 |
| 4 | Stem | Forged Brass | IS 6912 Gr. FLB | 1 |
| 5 | Gland Nut | Forged Brass | IS 6912 Gr. FLB | 1 |
| 6 | Gland | Forged Brass | IS 6912 Gr. FLB | 1 |
| 7 | Gland Packing | PTFE | - - - | - |
| 8 | Bonnet | Bronze | IS 318 Gr. LTB2 | 1 |
| 9 | Body | Bronze | IS 318 Gr. LTB2 | 1 |
| 10 | Disc | Bronze | IS 318 Gr. LTB2 | 1 |
| 11 | Disc Nut | Bronze | IS 318 Gr. LTB2 | 1 |
| 12 | Name Plate | Aluminium | - - - | 1 |

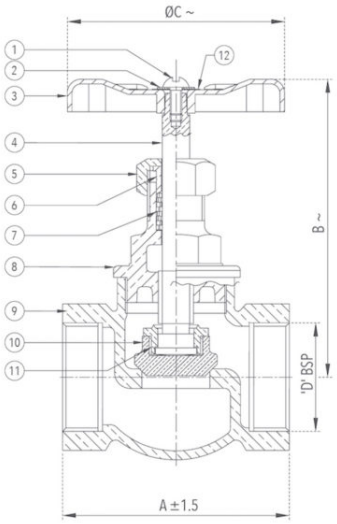


## Sizes / Dimensions

| Size (Inches) | Size (mm) | A ±1.5 | B ~ | ØC ~ | D |
|---|---|---|---|---|---|
| 1/4 | 8 | 33 | 60 | 50 | 1/4″ |
| 3/8 | 10 | 37 | 60 | 50 | 3/8″ |
| 1/2 | 15 | 45 | 70 | 60 | 1/2″ |
| 3/4 | 20 | 53 | 85 | 65 | 3/4″ |
| 1 | 25 | 57 | 93 | 70 | 1″ |
| 1 1/4 | 32 | 71 | 109 | 80 | 1 1/4″ |
| 1 1/2 | 40 | 80 | 117 | 90 | 1 1/2″ |
| 2 | 50 | 86 | 137 | 110 | 2″ |
| 2 1/2 | 65 | 107 | 154 | 120 | 2 1/2″ |
| 3 | 80 | 123 | 184 | 140 | 3″ |
| 4 | 100 | 159 | 224 | 160 | 4″ |

~ ±10

ZOLOTO INDUSTRIES
Zoloto House, 11th Milestone, Lambra, Nakodar Road,
Jalandhar – 144026. Punjab. INDIA
https://www.zolotovalves.com
Phones : +91 181 4676666 (100 Lines)
Facsimile: +91 181 2792500 & 2251600
Email : sales@zolotovalves.com, mktg@zolotovalves.com

ZOLOTO®
VALVES
since 1966

AN ISO 9001 CERTIFIED COMPANY

# 1001A Bronze Angle Globe Valve No.4 (Screwed)

## Salient Features

- Angle Pattern.
- Screwed Female Ends to IS 554 / BS 21 / ISO 7.
- Screwed in Bonnet, Inside Screw, Rising Stem, Integral Seat.
- Designed sheet metal handwheel for a firm grip and convenient operation.
- Premium Quality PTFE Gland Packing.
- Medium Pattern.

Test Pressure (Hydrostatic) :
Shell : 24 kg/cm²g (340 psig)
Seat : 16 kg/cm²g (225 psig)
Maximum Working Temperature : 225°C

**Suitable For**
Water, Oil, Air*, Gases*
*Also available with PTFE Seating for Air and Gas applications, at a nominal extra price.

## Materials

| P.No. | Name of Part | Material of Construction | Specification | Quantity |
|---|---|---|---|---|
| 1 | Screw / Bolt | Carbon Steel (Zinc Plated) | - - - | 1 |
| 2 | Washer | Carbon Steel (Zinc Plated) | - - - | 1 |
| 3 | Handwheel | Sheet Metal (Powder Coated) | - - - | 1 |
| 4 | Stem | Forged Brass | IS 6912 Gr. FLB | 1 |
| 5 | Gland Nut | Forged Brass | IS 6912 Gr. FLB | 1 |
| 6 | Gland | Forged Brass | IS 6912 Gr. FLB | 1 |
| 7 | Gland Packing | PTFE | - - - | - |
| 8 | Bonnet | Bronze | IS 318 Gr. LTB2 | 1 |
| 9 | Body | Bronze | IS 318 Gr. LTB2 | 1 |
| 10 | Disc Nut | Bronze | IS 318 Gr. LTB2 | 1 |
| 11 | Disc | Bronze | IS 318 Gr. LTB2 | 1 |
| 12 | Name Plate | Aluminium | - - - | 1 |

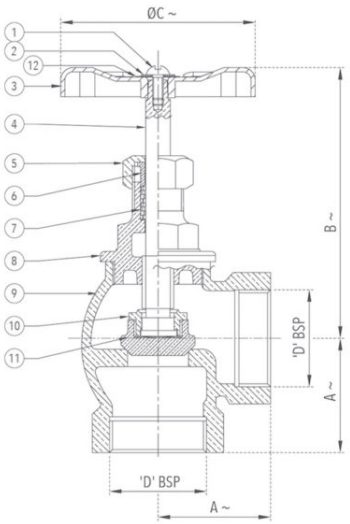


## Sizes / Dimensions

| Size (Inches) | Size (mm) | A ~ | B ~ | ØC ~ | D |
|---|---|---|---|---|---|
| 1/2 | 15 | 29 | 75 | 60 | 1/2″ |
| 3/4 | 20 | 35 | 82 | 65 | 3/4″ |
| 1 | 25 | 43 | 90 | 70 | 1″ |
| 1 1/4 | 32 | 47 | 115 | 80 | 1 1/4″ |
| 1 1/2 | 40 | 54 | 125 | 90 | 1 1/2″ |
| 2 | 50 | 66 | 143 | 110 | 2″ |

~ ±10

ZOLOTO INDUSTRIES
Zoloto House, 11th Milestone, Lambra, Nakodar Road,
Jalandhar – 144026. Punjab. INDIA
https://www.zolotovalves.com
Phones : +91 181 4676666 (100 Lines)
Facsimile: +91 181 2792500 & 2251600
Email : sales@zolotovalves.com, mktg@zolotovalves.com

ZOLOTO®
VALVES
since 1966

AN ISO 9001 CERTIFIED COMPANY

# 1002 Bronze Globe Valve No.5 (Screwed)

## Salient Features

- Screwed Female Ends to IS 554 / BS 21 / ISO 7.
- Screwed in Bonnet, Inside Screw, Rising Stem, Integral Seat.
- Designed sheet metal handwheel for a firm grip and convenient operation.
- Provision for re-packing under pressure.
- Premium Quality PTFE Gland Packing.
- Heavy Pattern.

Test Pressure (Hydrostatic) :
Shell : 35 kg/cm²g (500 psig)
Seat : 20 kg/cm²g (285 psig)
Maximum Working Temperature : 225°C

**Suitable For**
Water, Oil, Air*, Gases*
*Also available with PTFE Seating for Air and Gas applications, at a nominal extra price.

## Materials

| P.No. | Name of Part | Material of Construction | Specification | Quantity |
|---|---|---|---|---|
| 1 | Screw / Bolt | Carbon Steel (Zinc Plated) | - - - | 1 |
| 2 | Washer | Carbon Steel (Zinc Plated) | - - - | 1 |
| 3 | Handwheel | Sheet Metal (Powder Coated) | - - - | 1 |
| 4 | Stem | Forged Brass | IS 6912 Gr. FLB | 1 |
| 5 | Gland Nut | Forged Brass | IS 6912 Gr. FLB | 1 |
| 6 | Gland | Forged Brass | IS 6912 Gr. FLB | 1 |
| 7 | Gland Packing | PTFE | - - - | - |
| 8 | Bonnet | Bronze | IS 318 Gr. LTB2 | 1 |
| 9 | Body | Bronze | IS 318 Gr. LTB2 | 1 |
| 10 | Disc Nut | Bronze | IS 318 Gr. LTB2 | 1 |
| 11 | Disc | Bronze | IS 318 Gr. LTB2 | 1 |
| 12 | Name Plate | Aluminium | - - - | 1 |

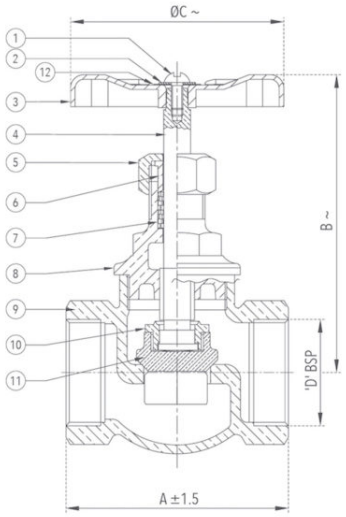


## Sizes / Dimensions

| Size (Inches) | Size (mm) | A ±1.5 | B ~ | ØC ~ | D |
|---|---|---|---|---|---|
| 1/4 | 8 | 34 | 58 | 60 | 1/4″ |
| 3/8 | 10 | 41 | 72 | 60 | 3/8″ |
| 1/2 | 15 | 55 | 90 | 60 | 1/2″ |
| 3/4 | 20 | 65 | 103 | 65 | 3/4″ |
| 1 | 25 | 82 | 119 | 70 | 1″ |
| 1 1/4 | 32 | 88 | 136 | 70 | 1 1/4″ |
| 1 1/2 | 40 | 98 | 147 | 102 | 1 1/2″ |
| 2 | 50 | 120 | 162 | 110 | 2″ |
| 2 1/2 | 65 | 133 | 189 | 130 | 2 1/2″ |
| 3 | 80 | 160 | 215 | 164 | 3″ |

~ ±10

ZOLOTO INDUSTRIES
Zoloto House, 11th Milestone, Lambra, Nakodar Road,
Jalandhar – 144026. Punjab. INDIA
https://www.zolotovalves.com
Phones : +91 181 4676666 (100 Lines)
Facsimile: +91 181 2792500 & 2251600
Email : sales@zolotovalves.com, mktg@zolotovalves.com

ZOLOTO®
VALVES
since 1966

AN ISO 9001 CERTIFIED COMPANY

# 1003 Bronze Globe Valve No.8 (Flanged)

## Salient Features

- Flanged Ends to BS 10 Table 'D'.
- Screwed in Bonnet, Inside Screw, Rising Stem, Integral Seat.
- Designed sheet metal handwheel for a firm grip and convenient operation.
- Premium Quality PTFE Gland Packing.
- Medium Pattern.

Test Pressure (Hydrostatic) :
Shell : 24 kg/cm²g (340 psig)
Seat : 16 kg/cm²g (225 psig)
Maximum Working Temperature : 225°C

**Suitable For**
Water, Oil, Air*, Gases*
*Also available with PTFE Seating for Air and Gas applications, at a nominal extra price.

## Materials

| P.No. | Name of Part | Material of Construction | Specification | Quantity |
|---|---|---|---|---|
| 1 | Screw / Bolt | Carbon Steel (Zinc Plated) | - - - | 1 |
| 2 | Washer | Carbon Steel (Zinc Plated) | - - - | 1 |
| 3 | Handwheel | Sheet Metal (Powder Coated) | - - - | 1 |
| 4 | Stem | Forged Brass | IS 6912 Gr. FLB | 1 |
| 5 | Gland Nut | Forged Brass | IS 6912 Gr. FLB | 1 |
| 6 | Gland | Forged Brass | IS 6912 Gr. FLB | 1 |
| 7 | Gland Packing | PTFE | - - - | - |
| 8 | Bonnet | Bronze | IS 318 Gr. LTB2 | 1 |
| 9 | Body | Bronze | IS 318 Gr. LTB2 | 1 |
| 10 | Disc Nut | Bronze | IS 318 Gr. LTB2 | 1 |
| 11 | Disc | Bronze | IS 318 Gr. LTB2 | 1 |
| 12 | Name Plate | Aluminium | - - - | 1 |

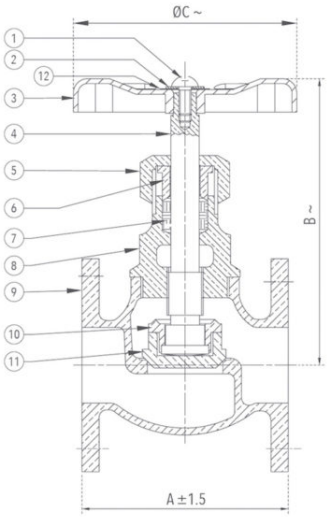


## Sizes / Dimensions

| Size (Inches) | Size (mm) | A ±1.5 | B ~ | ØC ~ |
|---|---|---|---|---|
| 1/2 | 15 | 53 | 85 | 50 |
| 3/4 | 20 | 67 | 90 | 57 |
| 1 | 25 | 80 | 98 | 62 |
| 1 1/4 | 32 | 85 | 115 | 76 |
| 1 1/2 | 40 | 91 | 127 | 80 |
| 2 | 50 | 106 | 140 | 86 |

~ ±10

**NOTE :** Also available with Open-Shut indicator and locking device at a nominal extra price.

ZOLOTO INDUSTRIES
Zoloto House, 11th Milestone, Lambra, Nakodar Road,
Jalandhar – 144026. Punjab. INDIA
https://www.zolotovalves.com
Phones : +91 181 4676666 (100 Lines)
Facsimile: +91 181 2792500 & 2251600
Email : sales@zolotovalves.com, mktg@zolotovalves.com

ZOLOTO®
VALVES
since 1966

AN ISO 9001 CERTIFIED COMPANY

# 1004 Bronze Globe Valve (One Side Flanged) with PTFE Seating

## Salient Features

- Inlet Side Flanged to BS 10 Table 'D' and Outlet Side Screwed Female End to IS 554 / BS 21 / ISO 7.
- Screwed in Bonnet, Inside Screw, Rising Stem, Integral Seat.
- Designed sheet metal handwheel for a firm grip and convenient operation.
- Premium Quality PTFE Gland Packing.
- Medium Pattern.
- Ideal for transformers, even for less viscous oil.

Test Pressure (Hydrostatic) :
Shell : 24 kg/cm²g (340 psig)
Seat : 16 kg/cm²g (225 psig)
Maximum Working Temperature : 225°C

**Suitable For**
Oil
*Also available with Open-Shut indicator and Locking Device, at a nominal extra price.

## Materials

| P.No. | Name of Part | Material of Construction | Specification | Quantity |
|---|---|---|---|---|
| 1 | Screw / Bolt | Carbon Steel (Zinc Plated) | - - - | 1 |
| 2 | Washer | Carbon Steel (Zinc Plated) | - - - | 1 |
| 3 | Handwheel | Sheet Metal (Powder Coated) | - - - | 1 |
| 4 | Stem | Forged Brass | IS 6912 Gr. FLB | 1 |
| 5 | Gland Nut | Forged Brass | IS 6912 Gr. FLB | 1 |
| 6 | Gland | Forged Brass | IS 6912 Gr. FLB | 1 |
| 7 | Gland Packing | PTFE | - - - | - |
| 8 | Bonnet | Bronze | IS 318 Gr. LTB2 | 1 |
| 9 | Body | Bronze | IS 318 Gr. LTB2 | 1 |
| 10 | Disc Nut | Bronze | IS 318 Gr. LTB2 | 1 |
| 11 | Disc | Bronze | IS 318 Gr. LTB2 | 1 |
| 12 | Disc Facing | PTFE | - - - | 1 |
| 13 | Retaining Nut | Forged Brass | IS 6912 Gr. FLB | 1 |
| 14 | Split Pin | Brass | - - - | 1 |
| 15 | Washer (Optional) | Brass Sheet | - - - | 1 |
| 16 | Name Plate | Aluminium | - - - | 1 |

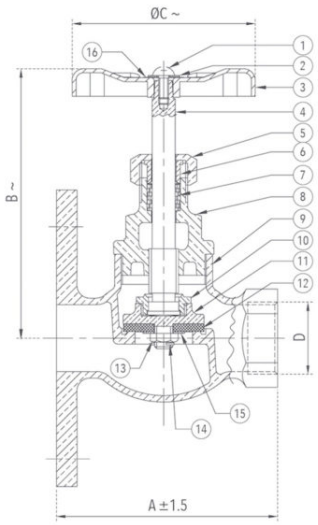


## Sizes / Dimensions

| Size (Inches) | Size (mm) | A ±1.5 | B ~ | ØC ~ | D |
|---|---|---|---|---|---|
| 1/2 | 15 | 53 | 85 | 60 | 1/2″ |
| 3/4 | 20 | 67 | 90 | 65 | 3/4″ |
| 1 | 25 | 80 | 98 | 70 | 1″ |
| 1 1/4 | 32 | 86 | 115 | 80 | 1 1/4″ |
| 1 1/2 | 40 | 91 | 127 | 90 | 1 1/2″ |
| 2 | 50 | 106 | 140 | 110 | 2″ |

~ ±10

**NOTE :** For size 15, 20 and 25 part number 10 is not applicable.

ZOLOTO INDUSTRIES
Zoloto House, 11th Milestone, Lambra, Nakodar Road,
Jalandhar – 144026. Punjab. INDIA
https://www.zolotovalves.com
Phones : +91 181 4676666 (100 Lines)
Facsimile: +91 181 2792500 & 2251600
Email : sales@zolotovalves.com, mktg@zolotovalves.com

ZOLOTO®
VALVES
since 1966

AN ISO 9001 CERTIFIED COMPANY

# 1006 Bronze Gate Valve (Hex. Type) (Screwed)

## Salient Features

- Screwed Female Ends to IS 554 / BS 21 / ISO 7.
- Screwed in Bonnet, Inside Screw, Non-Rising Stem, Integral Seat.
- Forged Brass Bonnet, Wedge, Stem and Gland Nut.
- Body designed for convenient fitting where space constraint is the factor.
- Designed sheet metal handwheel for a firm grip and convenient operation.
- Premium Quality PTFE Gland Packing.

Test Pressure (Hydrostatic) :
Shell : 24 kg/cm²g (340 psig)
Seat : 16 kg/cm²g (225 psig)
Maximum Working Temperature : 225°C

**Suitable For**
Water, Oil

## Materials

| P.No. | Name of Part | Material of Construction | Specification | Quantity |
|---|---|---|---|---|
| 1 | Screw / Bolt | Carbon Steel (Zinc Plated) | – – – | 1 |
| 2 | Washer | Carbon Steel (Zinc Plated) | – – – | 1 |
| 3 | Hand wheel | Sheet Metal (Powder Coated) | – – – | 1 |
| 4 | Stem | Forged Brass / Bronze | IS 6912 Gr. FLB / IS 318 Gr. LTB 2* | 1 |
| 5 | Gland Nut | Forged Brass | IS 6912 Gr. FLB | 1 |
| 6 | Gland | Forged Brass | IS 6912 Gr. FLB | 1 |
| 7 | Gland Packing | PTFE | – – – | – |
| 8 | Bonnet | Forged Brass / Bronze | IS 6912 Gr. FLB / IS 318 Gr. LTB 2* | 1 |
| 9 | Check Nut | Forged Brass | IS 6912 Gr. FLB | 1 |
| 10 | Body | Bronze | IS 318 Gr. LTB 2 | 1 |
| 11 | Wedge | Forged Brass | IS 6912 Gr. FLB | 1 |
| 12 | Name Plate | Aluminum | – – – | 1 |

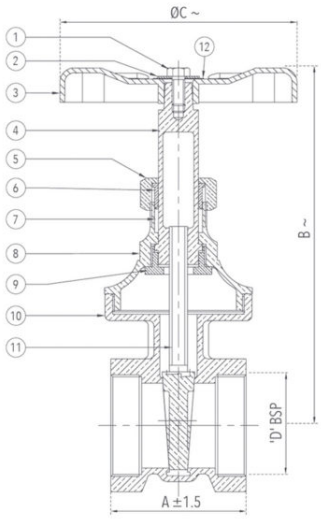


## Sizes / Dimensions

| Size (Inches) | Size (mm) | A ±1.5 | B ~ | ØC ~ | D |
|---|---|---|---|---|---|
| 1/4* | 8* | 35 | 92 | 60 | 1/4″ |
| 3/8* | 10* | 38 | 96 | 60 | 3/8″ |
| 1/2 | 15 | 41 | 103 | 60 | 1/2″ |
| 3/4 | 20 | 45 | 122 | 65 | 3/4″ |
| 1 | 25 | 50 | 137 | 70 | 1″ |
| 1 1/4 | 32 | 54 | 150 | 90 | 1 1/4″ |
| 1 1/2 | 40 | 60 | 166 | 90 | 1 1/2″ |
| 2 | 50 | 65 | 200 | 110 | 2″ |
| 2 1/2* | 65* | 76 | 250 | 120 | 2 1/2″ |
| 3* | 80* | 92 | 292 | 138 | 3″ |
| 4* | 100* | 105 | 365 | 160 | 4″ |

~ ±10

*Stem and Bonnet for Size 8, 10, 65, 80 and 100 are of Bronze.

**NOTE :** Size 6″ can also be made available.

ZOLOTO INDUSTRIES
Zoloto House, 11th Milestone, Lambra, Nakodar Road,
Jalandhar – 144026. Punjab. INDIA
https://www.zolotovalves.com
Phones : +91 181 4676666 (100 Lines)
Facsimile: +91 181 2792500 & 2251600
Email : sales@zolotovalves.com, mktg@zolotovalves.com

ZOLOTO®
VALVES
since 1966

AN ISO 9001 CERTIFIED COMPANY

# 1007 Bronze Gate Valve (Peg. Type) (Screwed)

## Salient Features

- Design Standard BSEN 12288 (BS 5154).
- Screwed Female Ends to IS 554 / BS 21 / ISO 7.
- Screwed in Bonnet, Inside Screw, Non-Rising Stem, Integral Seat.
- Designed sheet metal handwheel for a firm grip and convenient operation.
- Premium Quality PTFE Gland Packing.

Test Pressure (Hydrostatic) :
Shell : 25 kg/cm²g (350 psig)
Seat : 16 kg/cm²g (225 psig)
Maximum Working Temperature : 225°C

**Suitable For**
Water, Oil

## Materials

| P.No. | Name of Part | Material of Construction | Specification | Quantity |
|---|---|---|---|---|
| 1 | Screw / Bolt | Carbon Steel (Zinc Plated) | - - - | 1 |
| 2 | Washer | Carbon Steel (Zinc Plated) | - - - | 1 |
| 3 | Handwheel | Sheet Metal (Powder Coated) | - - - | 1 |
| 4 | Stem | Forged Brass | IS 6912 Gr. FLB | 1 |
| 5 | Gland Nut | Forged Brass | IS 6912 Gr. FLB | 1 |
| 6 | Gland | Forged Brass | IS 6912 Gr. FLB | 1 |
| 7 | Gland Packing | PTFE | - - - | - |
| 8 | Bonnet | Forged Brass / Bronze | IS 6912 Gr. FLB / IS 318 Gr. LTB2 | 1 |
| 9 | Check Nut | Forged Brass | IS 6912 Gr. FLB | 1 |
| 10 | Body | Bronze | IS 318 Gr. LTB 2 | 1 |
| 11 | Wedge | Bronze | IS 318 Gr. LTB 2 | 1 |
| 12 | Name Plate | Aluminium | - - - | 1 |

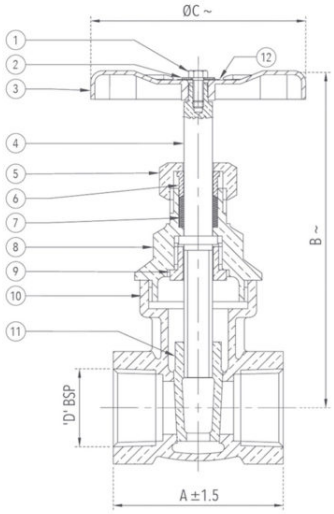


## Sizes / Dimensions

| Size (Inches) | Size (mm) | A ±1.5 | B ~ | ØC ~ | D |
|---|---|---|---|---|---|
| 1/4* | 8* | 43 | 89 | 50 | 1/4″ |
| 3/8* | 10* | 43 | 92 | 50 | 3/8″ |
| 1/2 | 15 | 48 | 105 | 60 | 1/2″ |
| 3/4 | 20 | 53 | 114 | 65 | 3/4″ |
| 1 | 25 | 60 | 129 | 70 | 1″ |
| 1 1/4 | 32 | 68 | 139 | 80 | 1 1/4″ |
| 1 1/2 | 40 | 72 | 155 | 90 | 1 1/2″ |
| 2 | 50 | 83 | 189 | 110 | 2″ |
| 2 1/2 | 65 | 94 | 220 | 120 | 2 1/2″ |
| 3 | 80 | 105 | 250 | 140 | 3″ |
| 4* | 100* | 127 | 307 | 160 | 4″ |

~ ±10

*Bonnet for Size 8, 10 and 100 is of Bronze.

ZOLOTO INDUSTRIES
Zoloto House, 11th Milestone, Lambra, Nakodar Road,
Jalandhar – 144026. Punjab. INDIA
https://www.zolotovalves.com
Phones : +91 181 4676666 (100 Lines)
Facsimile: +91 181 2792500 & 2251600
Email : sales@zolotovalves.com, mktg@zolotovalves.com

ZOLOTO®
VALVES
since 1966

AN ISO 9001 CERTIFIED COMPANY

# 1008 Bronze Ball Valve (Screwed)

## Salient Features

- Screwed Female Ends to IS 554 / BS 21 / ISO 7.
- Full Bore, Two Piece Design.
- Quarter Turn, Lever Operated.
- Provided with Stainless Steel Ball.
- Premium Quality PTFE Gland Packing and Seating.

Test Pressure (Hydrostatic) :
Shell : 25 kg/cm²g (350 psig)
Seat : 16 kg/cm²g (225 psig)
Maximum Working Temperature : 220°C

**Suitable For**
Water, Oil

## Materials

| P.No. | Name of Part | Material of Construction | Specification | Quantity |
|---|---|---|---|---|
| 1 | Body | Bronze | IS 318 GR. LTB 2 | 1 |
| 2 | Bonnet | Bronze / Forged Brass | IS 318 GR. LTB 2 / IS 6912 Gr. FLB | 1 |
| 3 | Ball | Stainless Steel | ASTM A276 Type 304 / ASTM A351 Gr. CF8 | 1 |
| 4 | Body Seat Ring | PTFE | - - - | 2 |
| 5 | Thrust Washer | PTFE | - - - | 1 |
| 6 | Gland Packing | PTFE | - - - | - |
| 7 | Stem | Stainless Steel | ASTM A276 Type 410 | 1 |
| 8 | Gland | Forged Brass | IS 6912 Gr. FLB | 1 |
| 9 | Lever | Mild Steel | - - - | 1 |
| 10 | Nut | Carbon Steel | - - - | 1 |

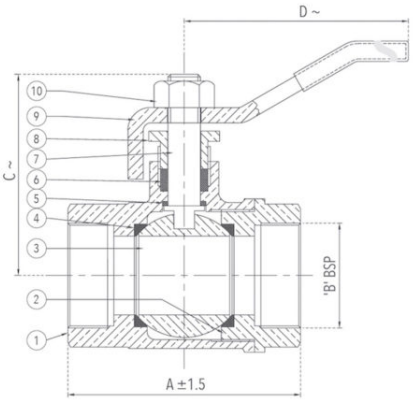


## Sizes / Dimensions

| Size (Inches) | Size (mm) | A ±1.5 | B | C ~ | D ~ |
|---|---|---|---|---|---|
| 1/2* | 15* | 60 | 1/2″ | 44 | 105 |
| 3/4* | 20* | 66 | 3/4″ | 48 | 123 |
| 1* | 25* | 73 | 1″ | 58 | 123 |
| 1 1/4 | 32 | 91 | 1 1/4″ | 73 | 148 |
| 1 1/2 | 40 | 91 | 1 1/2″ | 80 | 178 |
| 2 | 50 | 117 | 2″ | 85 | 213 |
| 2 1/2 | 65 | 135 | 2 1/2″ | 110 | 245 |
| 3 | 80 | 162 | 3″ | 116 | 330 |
| 4 | 100 | 201 | 4″ | 139 | 330 |

~ ±10

*Bonnet for Size 15, 20 and 25 is of Forged Brass.

ZOLOTO INDUSTRIES
Zoloto House, 11th Milestone, Lambra, Nakodar Road,
Jalandhar – 144026. Punjab. INDIA
https://www.zolotovalves.com
Phones : +91 181 4676666 (100 Lines)
Facsimile: +91 181 2792500 & 2251600
Email : sales@zolotovalves.com, mktg@zolotovalves.com

ZOLOTO®
VALVES
since 1966

AN ISO 9001 CERTIFIED COMPANY

# 1008A Bronze Ball Valve E-Model (Screwed)

## Salient Features

- Screwed Female Ends to IS 554 / BS 21 / ISO 7.
- Full Bore, Two Piece Design.
- Quarter Turn, Lever Operated.
- Provided with Stainless Steel Ball.
- Premium Quality PTFE Gland Packing and Seating.

Test Pressure (Hydrostatic) :
Shell : 20 kg/cm²g (285 psig)
Seat : 13.5 kg/cm²g (192 psig)
Maximum Working Temperature : 220°C

**Suitable For**
Water, Oil

## Materials

| P.No. | Name of Part | Material of Construction | Specification | Quantity |
|---|---|---|---|---|
| 1 | Body | Bronze | IS 318 Gr. LTB 2 | 1 |
| 2 | Bonnet | Bronze | IS 318 Gr. LTB 2 | 1 |
| 3 | Ball | Stainless Steel | ASTM A276 Type 304 / ASTM A351 Gr. CF8 | 1 |
| 4 | Body Seat Ring | PTFE | – – – | 2 |
| 5 | Thrust Washer | PTFE | – – – | 1 |
| 6 | Gland Packing | PTFE | – – – | – |
| 7 | Stem | Stainless Steel | ASTM A276 Type 410 | 1 |
| 8 | Gland | Forged Brass | IS 6912 Gr. FLB | 1 |
| 9 | Lever | Mild Steel | – – – | 1 |
| 10 | Nut | Carbon Steel | – – – | 1 |

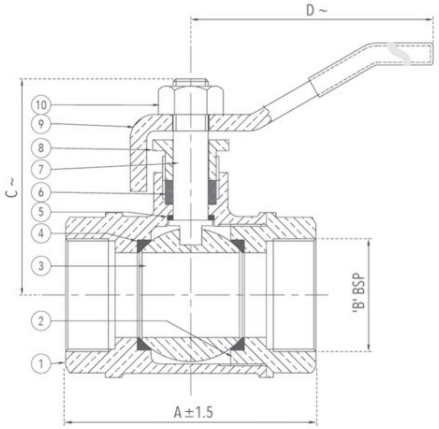


## Sizes / Dimensions

| Size (Inches) | Size (mm) | A ±1.5 | B | C ~ | D ~ |
|---|---|---|---|---|---|
| 1/2 | 15 | 53 | 1/2″ | 40 | 106 |
| 3/4 | 20 | 58 | 3/4″ | 44 | 123 |
| 1 | 25 | 68 | 1″ | 50 | 123 |
| 1 1/4 | 32 | 76 | 1 1/4″ | 65 | 147 |
| 1 1/2 | 40 | 85 | 1 1/2″ | 72 | 178 |
| 2 | 50 | 102 | 2″ | 79 | 217 |

~ ±10

ZOLOTO INDUSTRIES
Zoloto House, 11th Milestone, Lambra, Nakodar Road,
Jalandhar – 144026. Punjab. INDIA
https://www.zolotovalves.com
Phones : +91 181 4676666 (100 Lines)
Facsimile: +91 181 2792500 & 2251600
Email : sales@zolotovalves.com, mktg@zolotovalves.com

ZOLOTO®
VALVES
since 1966

AN ISO 9001 CERTIFIED COMPANY

# 1008B Forged Brass Ball Valve (Screwed)

## Salient Features

- Screwed Female Ends to IS 554 / BS 21 / ISO 7.
- Full Bore, Two Piece Design.
- Quarter Turn, Lever Operated.
- Provided with Forged Brass Hard Chrome Plated Ball.
- Premium Quality PTFE Gland Packing and Seating.
- Chrome Finish.

Test Pressure (Hydrostatic) :
Shell : 25 kg/cm²g (350 psig)
Seat : 16 kg/cm²g (225 psig)
Maximum Working Temperature : 220°C

**Suitable For**
Water, Oil

## Materials

| P.No. | Name of Part | Material of Construction | Specification | Quantity |
|---|---|---|---|---|
| 1 | Body | Forged Brass | IS 6912 Gr. FLB | 1 |
| 2 | Bonnet | Forged Brass | IS 6912 Gr. FLB | 1 |
| 3 | Ball | Forged Brass (Hard Chrome Plated) | IS 6912 Gr. FLB | 1 |
| 4 | Body Seat Ring | PTFE | - - - | 2 |
| 5 | Thrust Washer | PTFE | - - - | 1 |
| 6 | Gland Packing | PTFE | - - - | |
| 7 | Stem | Forged Brass | IS 6912 Gr. FLB | 1 |
| 8 | Gland | Forged Brass | - - - | 1 |
| 9 | Lever | Aluminium Alloy / Mild Steel | - - - | 1 |
| 10 | Nut | Brass (Chrome Plated) | - - - | 1 |

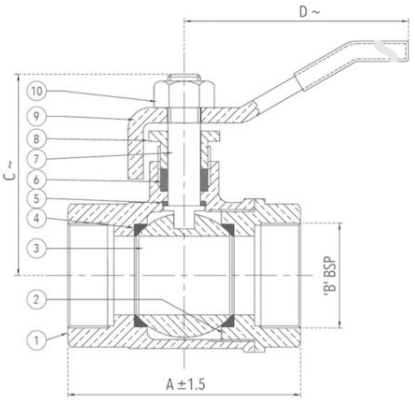


## Sizes / Dimensions

| Size (Inches) | Size (mm) | A ±1.5 | B | C ~ | D ~ |
|---|---|---|---|---|---|
| 1/4 | 8 | 47 | 1/4″ | 37 | 90 |
| 3/8 | 10 | 47 | 3/8″ | 37 | 90 |
| 1/2 | 15 | 50 | 1/2″ | 40 | 106 |
| 3/4 | 20 | 57 | 3/4″ | 43 | 132 |
| 1 | 25 | 67 | 1″ | 47 | 132 |
| 1 1/4 | 32 | 76 | 1 1/4″ | 62 | 166 |
| 1 1/2 | 40 | 87 | 1 1/2″ | 68 | 176 |
| 2 | 50 | 104 | 2″ | 80 | 216 |
| 2 1/2 | 65 | 139 | 2 1/2″ | 100 | 216 |
| 3 | 80 | 155 | 3″ | 110 | 280 |
| 4 | 100 | 177 | 4″ | 124 | 280 |

~ ±10

ZOLOTO INDUSTRIES
Zoloto House, 11th Milestone, Lambra, Nakodar Road,
Jalandhar – 144026. Punjab. INDIA
https://www.zolotovalves.com
Phones : +91 181 4676666 (100 Lines)
Facsimile: +91 181 2792500 & 2251600
Email : sales@zolotovalves.com, mktg@zolotovalves.com

ZOLOTO®
VALVES
since 1966

AN ISO 9001 CERTIFIED COMPANY

# 1009 Bronze Vertical Check Valve (Screwed)

## Salient Features

- Screwed Female Ends to IS 554 / BS 21 / ISO 7.
- Single Piece Design, Integral Seat.
- Meant for Vertical Lines Only.
- Permits flow in one direction and shuts automatically if the flow reverses.
- Spring Loaded and 'O' Ring Type.
- Also available with metal to metal seating.

Test Pressure (Hydrostatic) :
Shell : 25 kg/cm²g (350 psig)
Seat : 16 kg/cm²g (225 psig)
Maximum Working Temperature : 80°C

**Suitable For**
Water, Oil

## Materials

| P.No. | Name of Part | Material of Construction | Specification | Quantity |
|---|---|---|---|---|
| 1 | Body | Bronze | IS 318 Gr. LTB 2 | 1 |
| 2 | Disc | Bronze | IS 318 Gr. LTB 2 | 1 |
| 3 | 'O' Ring | Nitrile Rubber | IS 5192 – 1 | 1 |
| 4 | Spring | Stainless Steel | Type 304 | 1 |
| 5 | Disc Nut | Brass | – – – | 1 |
| 6 | Split Pin | Brass | – – – | 1 |

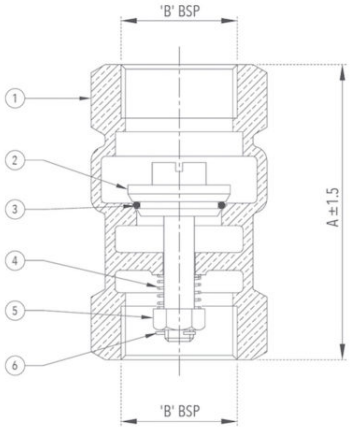


## Sizes / Dimensions

| Size (Inches) | Size (mm) | A ±1.5 | B |
|---|---|---|---|
| 1/2 | 15 | 55 | 1/2″ |
| 3/4 | 20 | 66 | 3/4″ |
| 1 | 25 | 76 | 1″ |
| 1 1/4 | 32 | 80 | 1 1/4″ |
| 1 1/2 | 40 | 85 | 1 1/2″ |
| 2 | 50 | 93 | 2″ |
| 2 1/2 | 65 | 114 | 2 1/2″ |
| 3 | 80 | 118 | 3″ |
| 4 | 100 | 141 | 4″ |

ZOLOTO INDUSTRIES
Zoloto House, 11th Milestone, Lambra, Nakodar Road,
Jalandhar – 144026. Punjab. INDIA
https://www.zolotovalves.com
Phones : +91 181 4676666 (100 Lines)
Facsimile: +91 181 2792500 & 2251600
Email : sales@zolotovalves.com, mktg@zolotovalves.com

ZOLOTO®
VALVES
since 1966

AN ISO 9001 CERTIFIED COMPANY

# 1009A Forged Brass Multi Utility Check Valve (Screwed)

## Salient Features

- Screwed Female Ends to IS 554 / BS 21 / ISO 7.
- Screwed in Bonnet.
- Suitable for both Horizontal and Vertical Lines.
- Permits flow in one direction and shuts automatically if the flow reverses.
- Disc is guided in Body as well as in Bonnet.
- Chrome Finish.

Test Pressure (Hydrostatic) :
Shell : 15 kg/cm²g (220 psig)
Seat : 10 kg/cm²g (150 psig)
Maximum Working Temperature : 90°C

**Suitable For**
Water, Oil

## Materials

| P.No. | Name of Part | Material of Construction | Specification | Quantity |
|---|---|---|---|---|
| 1 | Body | Forged Brass | IS 6912 Gr. FLB | 1 |
| 2 | Spring | Stainless Steel | Type 304 | 1 |
| 3 | Disc | Forged Brass | IS 6912 Gr. FLB | 1 |
| 4 | Disc Facing | Nitrile Rubber | IS 638 Type B | 1 |
| 5 | Bonnet | Forged Brass | IS 6912 Gr. FLB | 1 |

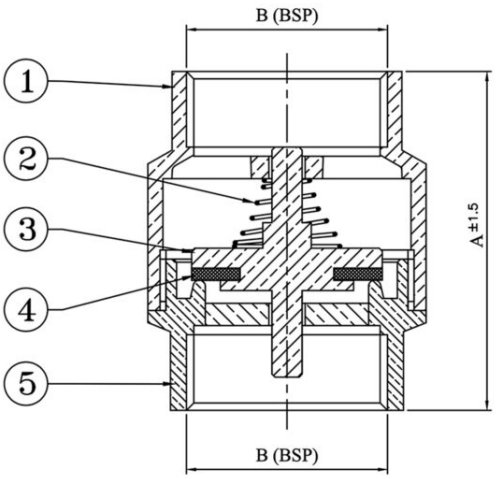


## Sizes / Dimensions

| Size (Inches) | Size (mm) | A ±1.5 | B |
|---|---|---|---|
| 1/2 | 15 | 46 | 1/2″ |
| 3/4 | 20 | 53 | 3/4″ |
| 1 | 25 | 56 | 1″ |
| 1 1/4 | 32 | 60 | 1 1/4″ |
| 1 1/2 | 40 | 65 | 1 1/2″ |
| 2 | 50 | 76 | 2″ |

ZOLOTO INDUSTRIES
Zoloto House, 11th Milestone, Lambra, Nakodar Road,
Jalandhar – 144026. Punjab. INDIA
https://www.zolotovalves.com
Phones : +91 181 4676666 (100 Lines)
Facsimile: +91 181 2792500 & 2251600
Email : sales@zolotovalves.com, mktg@zolotovalves.com

ZOLOTO®
VALVES
since 1966

AN ISO 9001 CERTIFIED COMPANY

# 1010 Bronze Horizontal Check Valve (Screwed)

## Salient Features

- Screwed Female Ends to IS 554 / BS 21 / ISO 7.
- Screwed in Bonnet, Integral Seat.
- Permits flow in one direction and closes automatically if the flow reverses.
- Metal Disc is mushroom shaped with spherical seating surface.
- Meant for Horizontal Lines only.
- Disc is guided in Body as well as in Bonnet.
- Medium Pattern.
- Also available with metal to metal seating.

Test Pressure (Hydrostatic) :
Shell : 20 kg/cm²g (285 psig)
Seat : 13.5 kg/cm²g (192 psig)
Maximum Working Temperature : 80°C

**Suitable For**
Water, Oil

## Materials

| P.No. | Name of Part | Material of Construction | Specification | Quantity |
|---|---|---|---|---|
| 1 | Body | Bronze | IS 318 Gr. LTB 2 | 1 |
| 2 | Disc | Bronze | IS 318 Gr. LTB 2 | 1 |
| 3 | Bonnet | Bronze / Forged Brass | IS 318 Gr. LTB 2 / IS 6912 Gr. FLB | 1 |
| 4 | 'O' Ring | Nitrile Rubber | IS 5192 – 1 | 1 |

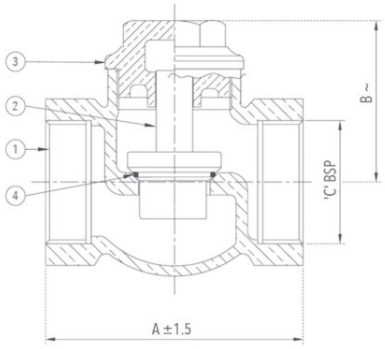


## Sizes / Dimensions

| Size (Inches) | Size (mm) | A ±1.5 | B ~ | C |
|---|---|---|---|---|
| 1/4 | 8 | 33 | 24 | 1/4″ |
| 3/8 | 10 | 37 | 28 | 3/8″ |
| 1/2 | 15 | 45 | 32 | 1/2″ |
| 3/4 | 20 | 53 | 37 | 3/4″ |
| 1 | 25 | 57 | 41 | 1″ |
| 1 1/4 | 32 | 71 | 46 | 1 1/4″ |
| 1 1/2 | 40 | 79 | 52 | 1 1/2″ |
| 2 | 50 | 86 | 66 | 2″ |
| 2 1/2* | 65* | 107 | 80 | 2 1/2″ |
| 3* | 80* | 123 | 94 | 3″ |
| 4* | 100* | 159 | 104 | 4″ |

~ ±10

*Bonnet for Size 65, 80 and 100 is of Bronze.

ZOLOTO INDUSTRIES
Zoloto House, 11th Milestone, Lambra, Nakodar Road,
Jalandhar – 144026. Punjab. INDIA
https://www.zolotovalves.com
Phones : +91 181 4676666 (100 Lines)
Facsimile: +91 181 2792500 & 2251600
Email : sales@zolotovalves.com, mktg@zolotovalves.com

ZOLOTO®
VALVES
since 1966

AN ISO 9001 CERTIFIED COMPANY

# 1010A Bronze Angle Type Lift Check Valve (Screwed)

## Salient Features

- Screwed Female Ends to IS 554 / BS 21 / ISO 7.
- Angle Pattern, Screwed in Bonnet, Integral Seat.
- Permits flow in one direction and closes automatically if the flow reverses.
- Metal Disc is mushroom shaped with spherical seating surface.
- Disc is guided in Body as well as in Bonnet.
- Medium Pattern.
- Also available with metal to metal seating.

Test Pressure (Hydrostatic) :
Shell : 24 kg/cm²g (340 psig)
Seat : 16 kg/cm²g (225 psig)
Maximum Working Temperature : 80°C

**Suitable For**
Water, Oil

## Materials

| P.No. | Name of Part | Material of Construction | Specification | Quantity |
|---|---|---|---|---|
| 1 | Body | Bronze | IS 318 Gr. LTB 2 | 1 |
| 2 | Disc | Bronze | IS 318 Gr. LTB 2 | 1 |
| 3 | Bonnet | Forged Brass | IS 6912 Gr. FLB | 1 |
| 4 | 'O' Ring | Nitrile Rubber | IS 5192 – 1 | 1 |

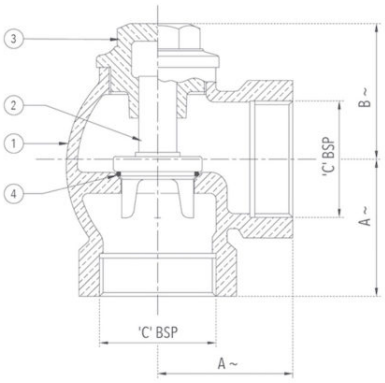


## Sizes / Dimensions

| Size (Inches) | Size (mm) | A ~ | B ~ | C |
|---|---|---|---|---|
| 1/2 | 15 | 29 | 34 | 1/2″ |
| 3/4 | 20 | 35 | 40 | 3/4″ |
| 1 | 25 | 43 | 46 | 1″ |
| 1 1/4 | 32 | 47 | 53 | 1 1/4″ |
| 1 1/2 | 40 | 54 | 61 | 1 1/2″ |
| 2 | 50 | 66 | 70 | 2″ |

~ ±10

ZOLOTO INDUSTRIES
Zoloto House, 11th Milestone, Lambra, Nakodar Road,
Jalandhar – 144026. Punjab. INDIA
https://www.zolotovalves.com
Phones : +91 181 4676666 (100 Lines)
Facsimile: +91 181 2792500 & 2251600
Email : sales@zolotovalves.com, mktg@zolotovalves.com

ZOLOTO®
VALVES
since 1966

AN ISO 9001 CERTIFIED COMPANY

# 1011 Bronze Horizontal Check Valve No.5 (Screwed)

## Salient Features

- Screwed Female Ends to IS 554 / BS 21 / ISO 7.
- Screwed in Bonnet, Integral Seat.
- Permits flow in one direction and closes automatically if the flow reverses.
- Metal Disc is mushroom shaped with spherical seating surface.
- Meant for Horizontal Lines Only.
- Disc is guided in Body as well as in Bonnet.
- Heavy Pattern.
- Also available with metal to metal seating.

Test Pressure (Hydrostatic) :
Shell : 35 kg/cm²g (500 psig)
Seat : 20 kg/cm²g (285 psig)
Maximum Working Temperature : 80°C

**Suitable For**
Water, Oil

## Materials

| P.No. | Name of Part | Material of Construction | Specification | Quantity |
|---|---|---|---|---|
| 1 | Body | Bronze | IS 318 Gr. LTB 2 | 1 |
| 2 | Disc | Bronze | IS 318 Gr. LTB 2 | 1 |
| 3 | Bonnet | Bronze | IS 318 Gr. LTB 2 | 1 |
| 4 | 'O' Ring | Nitrile Rubber | IS 5192 – 1 | 1 |

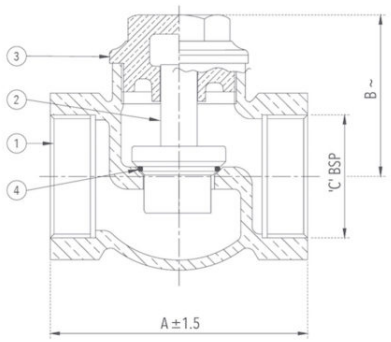


## Sizes / Dimensions

| Size (Inches) | Size (mm) | A ±1.5 | B ~ | C |
|---|---|---|---|---|
| 1/4 | 8 | 34 | 28 | 1/4″ |
| 3/8 | 10 | 41 | 35 | 3/8″ |
| 1/2 | 15 | 52 | 42 | 1/2″ |
| 3/4 | 20 | 65 | 48 | 3/4″ |
| 1 | 25 | 82 | 55 | 1″ |
| 1 1/4 | 32 | 88 | 61 | 1 1/4″ |
| 1 1/2 | 40 | 98 | 66 | 1 1/2″ |
| 2 | 50 | 120 | 75 | 2″ |
| 2 1/2 | 65 | 133 | 84 | 2 1/2″ |
| 3 | 80 | 160 | 96 | 3″ |

~ ±10

ZOLOTO INDUSTRIES
Zoloto House, 11th Milestone, Lambra, Nakodar Road,
Jalandhar – 144026. Punjab. INDIA
https://www.zolotovalves.com
Phones : +91 181 4676666 (100 Lines)
Facsimile: +91 181 2792500 & 2251600
Email : sales@zolotovalves.com, mktg@zolotovalves.com

ZOLOTO®
VALVES
since 1966

AN ISO 9001 CERTIFIED COMPANY

# 1012 Bronze Horizontal Check Valve No.8 (Flanged)

## Salient Features

- Flanged Ends to BS 10 Table 'D'.
- Screwed in Bonnet, Integral Seat.
- Permits flow in one direction and shuts automatically if the flow reverses.
- Metal Disc is mushroom shaped with spherical seating surface.
- Meant for Horizontal Lines Only.
- Disc is guided in Body as well as in Bonnet.
- Medium Pattern.
- Also available with metal to metal seating.

Test Pressure (Hydrostatic) :
Shell : 24 kg/cm²g (340 psig)
Seat : 16 kg/cm²g (225 psig)
Maximum Working Temperature : 80°C

**Suitable For**
Water, Oil

## Materials

| P.No. | Name of Part | Material of Construction | Specification | Quantity |
|---|---|---|---|---|
| 1 | Body | Bronze | IS 318 Gr. LTB 2 | 1 |
| 2 | Disc | Bronze | IS 318 Gr. LTB 2 | 1 |
| 3 | Bonnet | Bronze | IS 318 Gr. LTB 2 | 1 |
| 4 | 'O' Ring | Nitrile Rubber | IS 5192 – 1 | 1 |

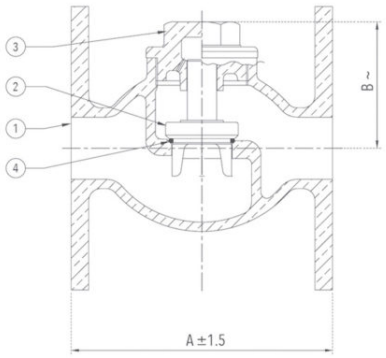


## Sizes / Dimensions

| Size (Inches) | Size (mm) | A ±1.5 | B ~ |
|---|---|---|---|
| 1/2 | 15 | 53 | 32 |
| 3/4 | 20 | 67 | 37 |
| 1 | 25 | 80 | 45 |
| 1 1/4 | 32 | 85 | 51 |
| 1 1/2 | 40 | 91 | 60 |
| 2 | 50 | 106 | 68 |

~ ±10

ZOLOTO INDUSTRIES
Zoloto House, 11th Milestone, Lambra, Nakodar Road,
Jalandhar – 144026. Punjab. INDIA
https://www.zolotovalves.com
Phones : +91 181 4676666 (100 Lines)
Facsimile: +91 181 2792500 & 2251600
Email : sales@zolotovalves.com, mktg@zolotovalves.com

ZOLOTO®
VALVES
since 1966

AN ISO 9001 CERTIFIED COMPANY

# 1013 Bronze Horizontal Check Valve No.9 (Screwed)

## Salient Features

- Screwed Female Ends to IS 554 / BS 21 / ISO 7.
- Screwed on Bonnet.
- Permits flow in one direction and closes automatically if the flow reverses.
- Renewable 13% Cr. Stainless Steel (S.S 410) working parts.
- Metal Disc is mushroom shaped with spherical seating surface.
- Meant for Horizontal Lines Only.
- Disc is guided in Bonnet.

Test Pressure (Hydrostatic) :
Shell : 35 kg/cm²g (500 psig)
Working Pressure (Steam) : 10.55 kg/cm²g (150 psig)
Maximum Working Temperature : 225°C

**Suitable For**
Steam, Water, Oil, Air*, Gases*
*Also available with PTFE Seating for Air and Gas applications, at a nominal extra price.

## Materials

| P.No. | Name of Part | Material of Construction | Specification | Quantity |
|---|---|---|---|---|
| 1 | Body | Bronze | IS 318 Gr. LTB 2 | 1 |
| 2 | Body Seat Ring | Stainless Steel | ASTM A276 Type 410 | 1 |
| 3 | Disc | Stainless Steel | ASTM A276 Type 410 | 1 |
| 4 | Bonnet | Bronze | IS 318 Gr. LTB 2 | 1 |

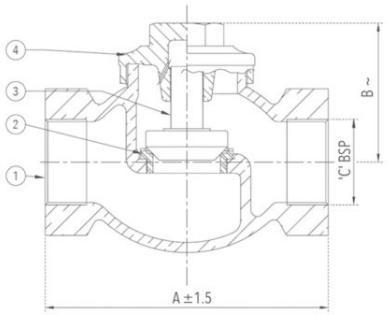


## Sizes / Dimensions

| Size (Inches) | Size (mm) | A ±1.5 | B ~ | C |
|---|---|---|---|---|
| 1/4 | 8 | 60 | 40 | 1/4″ |
| 3/8 | 10 | 60 | 43 | 3/8″ |
| 1/2 | 15 | 68 | 48 | 1/2″ |
| 3/4 | 20 | 84 | 50 | 3/4″ |
| 1 | 25 | 95 | 61 | 1″ |
| 1 1/4 | 32 | 106 | 72 | 1 1/4″ |
| 1 1/2 | 40 | 120 | 84 | 1 1/2″ |
| 2 | 50 | 146 | 93 | 2″ |
| 2 1/2 | 65 | 180 | 109 | 2 1/2″ |
| 3 | 80 | 200 | 121 | 3″ |
| 4 | 100 | 248 | 146 | 4″ |

~ ±10

ZOLOTO INDUSTRIES
Zoloto House, 11th Milestone, Lambra, Nakodar Road,
Jalandhar – 144026. Punjab. INDIA
https://www.zolotovalves.com
Phones : +91 181 4676666 (100 Lines)
Facsimile: +91 181 2792500 & 2251600
Email : sales@zolotovalves.com, mktg@zolotovalves.com

ZOLOTO®
VALVES
since 1966

AN ISO 9001 CERTIFIED COMPANY

# 1014 Bronze Horizontal Check Valve No.9 (Flanged)

## Salient Features

- Flanged Ends to BS 10 Table 'F'.
- Screwed on Bonnet.
- Permits flow in one direction and closes automatically if the flow reverses.
- Renewable 13% Cr. Stainless Steel (S.S 410) working parts.
- Metal Disc is mushroom shaped with spherical seating surface.
- Meant for Horizontal Lines Only.
- Disc is guided in Bonnet.

Test Pressure (Hydrostatic) :
Shell : 35 kg/cm²g (500 psig)
Working Pressure (Steam) : 10.55 kg/cm²g (150 psig)
Maximum Working Temperature : 225°C

**Suitable For**
Steam, Water, Oil, Air*, Gases*
*Also available with PTFE Seating for Air and Gas applications, at a nominal extra price.

## Materials

| P.No. | Name of Part | Material of Construction | Specification | Quantity |
|---|---|---|---|---|
| 1 | Body | Bronze | IS 318 Gr. LTB 2 | 1 |
| 2 | Body Seat Ring | Stainless Steel | ASTM A276 Type 410 | 1 |
| 3 | Disc | Stainless Steel | ASTM A276 Type 410 | 1 |
| 4 | Bonnet | Bronze | IS 318 Gr. LTB 2 | 1 |

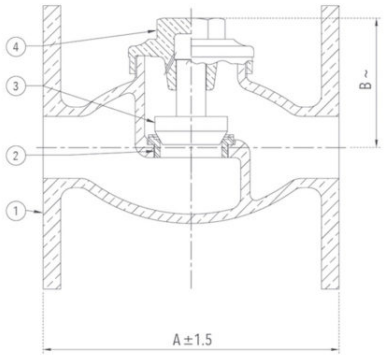


## Sizes / Dimensions

| Size (Inches) | Size (mm) | A ±1.5 | B ~ |
|---|---|---|---|
| 1/2 | 15 | 82 | 48 |
| 3/4 | 20 | 96 | 50 |
| 1 | 25 | 112 | 61 |
| 1 1/4 | 32 | 119 | 72 |
| 1 1/2 | 40 | 132 | 84 |
| 2 | 50 | 157 | 93 |
| 2 1/2 | 65 | 185 | 109 |
| 3 | 80 | 213 | 121 |
| 4 | 100 | 248 | 146 |

~ ±10

ZOLOTO INDUSTRIES
Zoloto House, 11th Milestone, Lambra, Nakodar Road,
Jalandhar – 144026. Punjab. INDIA
https://www.zolotovalves.com
Phones : +91 181 4676666 (100 Lines)
Facsimile: +91 181 2792500 & 2251600
Email : sales@zolotovalves.com, mktg@zolotovalves.com

ZOLOTO®
VALVES
since 1966

AN ISO 9001 CERTIFIED COMPANY

# 1031 Bronze Union Bonnet Globe Valve (Screwed)

## Salient Features

- Screwed Female Ends to IS 554 / BS 21 / ISO 7.
- Screwed on Bonnet, Rising Stem.
- Provision for re-packing under pressure.
- Renewable 13% Cr. Stainless Steel (S.S 410) working parts.
- Handwheel Operated.

Test Pressure (Hydrostatic) :
Shell : 35 kg/cm²g (500 psig)
Working Pressure (Steam) : 10.55 kg/cm²g (150 psig)
Maximum Working Temperature : 225°C

**Suitable For**
Steam, Water, Oil, Air*, Gases*
*Also available with PTFE Seating for Air and Gas applications, at a nominal extra price.

## Materials

| P.No. | Name of Part | Material of Construction | Specification | Quantity |
|---|---|---|---|---|
| 1 | Body | Bronze | IS 318 Gr. LTB 2 | 1 |
| 2 | Body Seat Ring | Stainless Steel | ASTM A276 Type 410 | 1 |
| 3 | Disc | Stainless Steel | ASTM A276 Type 410 | 1 |
| 4 | Disc Nut | Bronze | IS 318 Gr. LTB 2 | 1 |
| 5 | Stem | Stainless Steel | ASTM A276 Type 410 | 1 |
| 6 | Bonnet | Bronze | IS 318 Gr. LTB 2 | 1 |
| 7 | Gland Packing | Asbestos | - - - | - |
| 8 | Gland | Bronze | IS 318 Gr. LTB 2 | 1 |
| 9 | Gland Nut | Bronze | IS 318 Gr. LTB 2 | 1 |
| 10 | Handwheel | Cast Iron | IS 210 Gr. FG 200 | 1 |
| 11 | Washer | Carbon Steel | - - - | 1 |
| 12 | Nut | Carbon Steel | - - - | 1 |

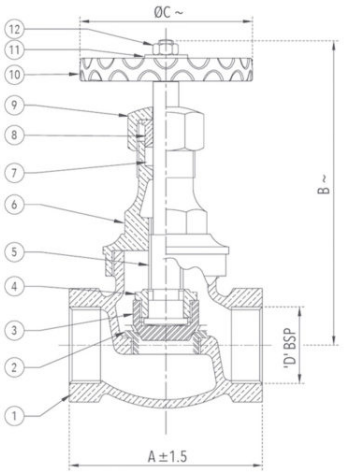


## Sizes / Dimensions

| Size (Inches) | Size (mm) | A ±1.5 | B ~ | ØC ~ | D |
|---|---|---|---|---|---|
| 1/4 | 8 | 60 | 110 | 70 | 1/4″ |
| 3/8 | 10 | 60 | 110 | 70 | 3/8″ |
| 1/2 | 15 | 68 | 117 | 70 | 1/2″ |
| 3/4 | 20 | 84 | 132 | 80 | 3/4″ |
| 1 | 25 | 95 | 148 | 86 | 1″ |
| 1 1/4 | 32 | 106 | 176 | 102 | 1 1/4″ |
| 1 1/2 | 40 | 120 | 188 | 115 | 1 1/2″ |
| 2 | 50 | 146 | 216 | 127 | 2″ |
| 2 1/2 | 65 | 180 | 248 | 170 | 2 1/2″ |
| 3 | 80 | 200 | 270 | 170 | 3″ |
| 4 | 100 | 248 | 332 | 190 | 4″ |

~ ±10

ZOLOTO INDUSTRIES
Zoloto House, 11th Milestone, Lambra, Nakodar Road,
Jalandhar – 144026. Punjab. INDIA
https://www.zolotovalves.com
Phones : +91 181 4676666 (100 Lines)
Facsimile: +91 181 2792500 & 2251600
Email : sales@zolotovalves.com, mktg@zolotovalves.com

ZOLOTO®
VALVES
since 1966

AN ISO 9001 CERTIFIED COMPANY

# 1032 Bronze Union Bonnet Globe Valve (Flanged)

## Salient Features

- Flanged Ends to BS 10 Table 'F'.
- Screwed on Bonnet, Rising Stem.
- Provision for re-packing under pressure.
- Renewable 13% Cr. Stainless Steel (S.S 410) working parts.
- Handwheel Operated.

Test Pressure (Hydrostatic) :
Shell : 35 kg/cm²g (500 psig)
Working Pressure (Steam) : 10.55 kg/cm²g (150 psig)
Maximum Working Temperature : 225°C

**Suitable For**
Steam, Water, Oil, Air*, Gases*
*Also available with PTFE Seating for Air and Gas applications, at a nominal extra price.

## Materials

| P.No. | Name of Part | Material of Construction | Specification | Quantity |
|---|---|---|---|---|
| 1 | Body | Bronze | IS 318 Gr. LTB 2 | 1 |
| 2 | Body Seat Ring | Stainless Steel | ASTM A276 Type 410 | 1 |
| 3 | Disc | Stainless Steel | ASTM A276 Type 410 | 1 |
| 4 | Disc Nut | Bronze | IS 318 Gr. LTB 2 | 1 |
| 5 | Stem | Stainless Steel | ASTM A276 Type 410 | 1 |
| 6 | Bonnet | Bronze | IS 318 Gr. LTB 2 | 1 |
| 7 | Gland Packing | Asbestos | - - - | - |
| 8 | Gland | Bronze | IS 318 Gr. LTB 2 | 1 |
| 9 | Gland Nut | Bronze | IS 318 Gr. LTB 2 | 1 |
| 10 | Hand Wheel | Cast Iron | IS 210 Gr. FG 200 | 1 |
| 11 | Washer | Carbon Steel | - - - | 1 |
| 12 | Nut | Carbon Steel | - - - | 1 |

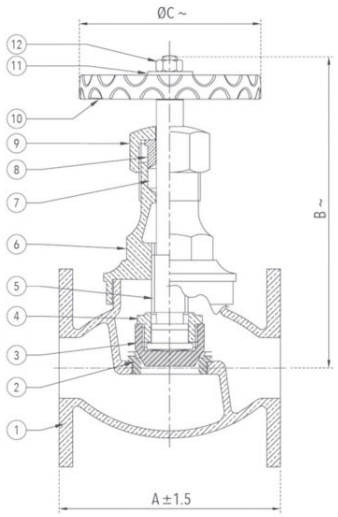


## Sizes / Dimensions

| Size (Inches) | Size (mm) | A ±1.5 | B ~ | ØC ~ |
|---|---|---|---|---|
| 1/2 | 15 | 82 | 117 | 70 |
| 3/4 | 20 | 96 | 132 | 80 |
| 1 | 25 | 112 | 148 | 86 |
| 1 1/4 | 32 | 119 | 176 | 102 |
| 1 1/2 | 40 | 132 | 188 | 115 |
| 2 | 50 | 157 | 216 | 127 |
| 2 1/2 | 65 | 185 | 248 | 170 |
| 3 | 80 | 213 | 270 | 170 |
| 4 | 100 | 248 | 332 | 190 |

~ ±10

ZOLOTO INDUSTRIES
Zoloto House, 11th Milestone, Lambra, Nakodar Road,
Jalandhar – 144026. Punjab. INDIA
https://www.zolotovalves.com
Phones : +91 181 4676666 (100 Lines)
Facsimile: +91 181 2792500 & 2251600
Email : sales@zolotovalves.com, mktg@zolotovalves.com

ZOLOTO®
VALVES
since 1966

AN ISO 9001 CERTIFIED COMPANY

# 1033 Bronze Globe Valve (Screwed)

IS 778
CM/L-0624644

## Salient Features

- Screwed Female Ends to IS 554 / BS 21 / ISO 7.
- Screwed in Bonnet, Inside Screw, Rising Stem, Integral Seat.
- Provision for re-packing under pressure.
- Premium Quality PTFE Gland Packing.
- Design Standard IS 778, Class-1.
- Designed sheet metal handwheel for a firm grip and convenient operation.

Test Pressure (Hydrostatic) :
Shell : 1.5 MPa
Seat & Back Seat : 1.0 MPa
Maximum Working Temperature : 45°C

**Suitable For**
Water, Oil
*Also available with Open-Shut Indicator & Locking Device and with PTFE Seating, at a nominal extra price.

## Materials

| P.No. | Name of Part | Material of Construction | Specification | Quantity |
|---|---|---|---|---|
| 1 | Body | Bronze | IS 318 Gr. LTB 2 | 1 |
| 2 | Disc | Bronze | IS 318 Gr. LTB 2 | 1 |
| 3 | Disc Nut | Bronze | IS 318 Gr. LTB 2 | 1 |
| 4 | Stem | Forged Brass | IS 6912 Gr. FLB | 1 |
| 5 | Bonnet | Bronze | IS 318 Gr. LTB 2 | 1 |
| 6 | Gland Packing | PTFE | – – – | – |
| 7 | Gland | Forged Brass | IS 6912 Gr. FLB | 1 |
| 8 | Gland Nut | Forged Brass | IS 6912 Gr. FLB | 1 |
| 9 | Handwheel | Sheet Metal (Powder Coated) | – – – | 1 |
| 10 | Name Plate | Aluminium | – – – | 1 |
| 11 | Washer | Carbon Steel (Zinc Plated) | – – – | 1 |
| 12 | Screw / Bolt | Carbon Steel (Zinc Plated) | – – – | 1 |

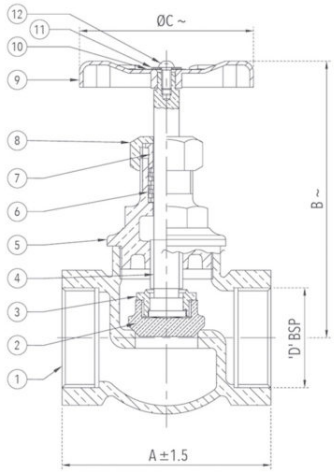


## Sizes / Dimensions

| Size (Inches) | Size (mm) | A ±1.5 | B ~ | ØC ~ | D |
|---|---|---|---|---|---|
| 1/4 | 8 | 47 | 67 | 50 | 1/4″ |
| 3/8 | 10 | 50 | 70 | 50 | 3/8″ |
| 1/2 | 15 | 60 | 90 | 60 | 1/2″ |
| 3/4 | 20 | 70 | 105 | 65 | 3/4″ |
| 1 | 25 | 80 | 115 | 70 | 1″ |
| 1 1/4 | 32 | 95 | 127 | 80 | 1 1/4″ |
| 1 1/2 | 40 | 110 | 138 | 90 | 1 1/2″ |
| 2 | 50 | 125 | 162 | 110 | 2″ |
| 2 1/2 | 65 | 160 | 183 | 115 | 2 1/2″ |
| 3 | 80 | 180 | 207 | 140 | 3″ |
| 4 | 100 | 216 | 250 | 160 | 4″ |

~ ±10

**NOTE :** 1. For size 8 & 10 part number 2 and 3 is not applicable.
2. For size 15 and 20 part number 3 is not applicable.

ZOLOTO INDUSTRIES
Zoloto House, 11th Milestone, Lambra, Nakodar Road,
Jalandhar – 144026. Punjab. INDIA
https://www.zolotovalves.com
Phones : +91 181 4676666 (100 Lines)
Facsimile: +91 181 2792500 & 2251600
Email : sales@zolotovalves.com, mktg@zolotovalves.com

ZOLOTO®
VALVES
since 1966

AN ISO 9001 CERTIFIED COMPANY

# 1034 Bronze Globe Valve (Flanged)

IS 778
CM/L-0624644

## Salient Features

- Flanged Ends to IS 778.
- Screwed in Bonnet, Inside Screw, Rising Stem, Integral Seat.
- Provision for re-packing under pressure.
- Premium Quality PTFE Gland Packing.
- Design Standard IS 778, Class-1.
- Designed sheet metal handwheel for a firm grip and convenient operation.

Test Pressure (Hydrostatic) :
Shell : 1.5 MPa
Seat & Back Seat : 1.0 MPa
Maximum Working Temperature : 45°C

**Suitable For**
Water, Oil
*Also available with Open-Shut Indicator & Locking Device and with PTFE Seating, at a nominal extra price.

## Materials

| P.No. | Name of Part | Material of Construction | Specification | Quantity |
|---|---|---|---|---|
| 1 | Body | Bronze | IS 318 Gr. LTB 2 | 1 |
| 2 | Disc | Bronze | IS 318 Gr. LTB 2 | 1 |
| 3 | Disc Nut | Bronze | IS 318 Gr. LTB 2 | 1 |
| 4 | Stem | Forged Brass | IS 6912 Gr. FLB | 1 |
| 5 | Bonnet | Bronze | IS 318 Gr. LTB 2 | 1 |
| 6 | Gland Packing | PTFE | – – – | – |
| 7 | Gland | Forged Brass | IS 6912 Gr. FLB | 1 |
| 8 | Gland Nut | Forged Brass | IS 6912 Gr. FLB | 1 |
| 9 | Handwheel | Sheet Metal (Powder Coated) | – – – | 1 |
| 10 | Name Plate | Aluminium | – – – | 1 |
| 11 | Washer | Carbon Steel (Zinc Plated) | – – – | 1 |
| 12 | Screw / Bolt | Carbon Steel (Zinc Plated) | – – – | 1 |

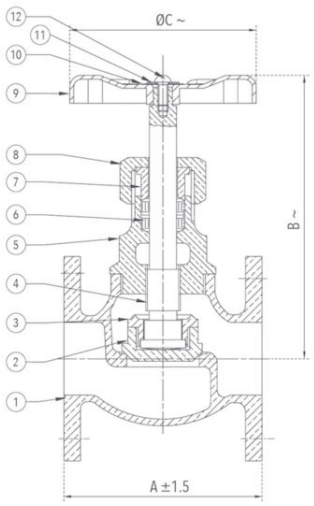


## Sizes / Dimensions

| Size (Inches) | Size (mm) | A ±1.5 | B ~ | ØC ~ |
|---|---|---|---|---|
| 1/2 | 15 | 75 | 90 | 60 |
| 3/4 | 20 | 85 | 105 | 65 |
| 1 | 25 | 95 | 115 | 70 |
| 1 1/4 | 32 | 110 | 127 | 80 |
| 1 1/2 | 40 | 120 | 138 | 90 |
| 2 | 50 | 145 | 162 | 110 |
| 2 1/2 | 65 | 165 | 183 | 115 |
| 3 | 80 | 185 | 207 | 140 |
| 4 | 100 | 216 | 250 | 160 |

~ ±10

**NOTE:** For size 15 and 20 part number 3 is not applicable.

ZOLOTO INDUSTRIES
Zoloto House, 11th Milestone, Lambra, Nakodar Road,
Jalandhar – 144026. Punjab. INDIA
https://www.zolotovalves.com
Phones : +91 181 4676666 (100 Lines)
Facsimile: +91 181 2792500 & 2251600
Email : sales@zolotovalves.com, mktg@zolotovalves.com

ZOLOTO®
VALVES
since 1966

AN ISO 9001 CERTIFIED COMPANY

# 1035 Bronze Gate Valve (Screwed) IS 778 CM/L-0624644

## Salient Features

- Screwed Female Ends to IS 554 / BS 21 / ISO 7.
- Screwed in Bonnet, Inside Screw, Non-Rising Stem, Integral Seat, Solid Wedge.
- Designed sheet metal handwheel for a firm grip and convenient operation.
- Premium Quality PTFE Gland Packing.
- Design Standard IS 778, Class-1.
- Provision for re-packing under pressure.

Test Pressure (Hydrostatic) :
Shell : 1.5 MPa
Seat & Back Seat : 1.0 MPa
Maximum Working Temperature : 45°C

**Suitable For**
Water, Oil
*Also available with Open-Shut Indicator and Locking Device, at a nominal extra price.

## Materials

| P.No. | Name of Part | Material of Construction | Specification | Quantity |
|---|---|---|---|---|
| 1 | Screw / Bolt | Carbon Steel (Zinc Plated) | – – – | 1 |
| 2 | Washer | Carbon Steel (Zinc Plated) | – – – | 1 |
| 3 | Handwheel | Sheet Metal (Power Coated) | – – – | 1 |
| 4 | Stem | Forged Brass | IS 6912 Gr. FLB | 1 |
| 5 | Gland Nut | Forged Brass | IS 6912 Gr. FLB | 1 |
| 6 | Gland | Forged Brass | IS 6912 Gr. FLB | 1 |
| 7 | Gland Packing | PTFE | – – – | – |
| 8 | Stuffing Box | Forged Brass | IS 6912 Gr. FLB | 1 |
| 9 | Bonnet | Forged Brass | IS 6912 Gr. FLB | 1 |
| 10 | Body | Bronze | IS 318 Gr. LTB 2 | 1 |
| 11 | Wedge | Bronze | IS 318 Gr. LTB 2 | 1 |
| 12 | Name Plate | Aluminium | – – – | 1 |

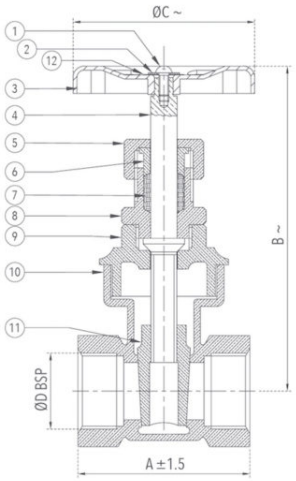


## Sizes / Dimensions

| Size (Inches) | Size (mm) | A ±1.5 | B ~ | ØC ~ | D |
|---|---|---|---|---|---|
| 1/4 | 8 | 50 | 84 | 50 | 1/4″ |
| 3/8 | 10 | 50 | 89 | 50 | 3/8″ |
| 1/2 | 15 | 60 | 105 | 60 | 1/2″ |
| 3/4 | 20 | 60 | 117 | 65 | 3/4″ |
| 1 | 25 | 70 | 132 | 70 | 1″ |
| 1 1/4 | 32 | 80 | 150 | 80 | 1 1/4″ |
| 1 1/2 | 40 | 90 | 165 | 90 | 1 1/2″ |
| 2 | 50 | 100 | 190 | 110 | 2″ |
| 2 1/2 | 65 | 105 | 232 | 115 | 2 1/2″ |
| 3 | 80 | 125 | 268 | 140 | 3″ |
| 4 | 100 | 160 | 332 | 160 | 4″ |

~ ±10

ZOLOTO INDUSTRIES
Zoloto House, 11th Milestone, Lambra, Nakodar Road,
Jalandhar – 144026. Punjab. INDIA
https://www.zolotovalves.com
Phones : +91 181 4676666 (100 Lines)
Facsimile: +91 181 2792500 & 2251600
Email : sales@zolotovalves.com, mktg@zolotovalves.com

ZOLOTO®
VALVES
since 1966

AN ISO 9001 CERTIFIED COMPANY

# 1035A Bronze Gate Valve Class-2 (Screwed)

IS 778 CM/L-0624644

## Salient Features

- Screwed Female Ends to IS 554 / BS 21 / ISO 7.
- Screwed in Bonnet, Inside Screw, Non-Rising Stem, Integral Seat, Solid Wedge.
- Designed sheet metal handwheel for a firm grip and convenient operation.
- Premium Quality PTFE Gland Packing.
- Design Standard IS 778, Class-2.
- Provision for re-packing under pressure.

Test Pressure (Hydrostatic) :
Shell : 2.4 MPa
Seat & Back Seat : 1.6 MPa
Maximum Working Temperature : 45°C

**Suitable For**
Water, Oil
*Also available with Open-Shut Indicator and Locking Device, at a nominal extra price.

## Materials

| P.No. | Name of Part | Material of Construction | Specification | Quantity |
|---|---|---|---|---|
| 1 | Screw / Bolt | Carbon Steel (Zinc Plated) | – – – | 1 |
| 2 | Washer | Carbon Steel (Zinc Plated) | – – – | 1 |
| 3 | Handwheel | Sheet Metal (Powder Coated) | – – – | 1 |
| 4 | Stem | Forged Brass | IS 6912 Gr. FLB | 1 |
| 5 | Gland Nut | Forged Brass / Bronze | IS 6912 Gr. FLB / IS 318 Gr. LTB 2 | 1 |
| 6 | Gland | Forged Brass | IS 6912 Gr. FLB | 1 |
| 7 | Gland Packing | PTFE | BSEN 12086 – 1 | – |
| 8 | Stuffing Box | Forged Brass | IS 6912 Gr. FLB | 1 |
| 9 | Bonnet | Forged Brass | IS 6912 Gr. FLB | 1 |
| 10 | Body | Bronze | IS 318 Gr. LTB 2 | 1 |
| 11 | Wedge | Bronze | IS 318 Gr. LTB 2 | 1 |
| 12 | Name Plate | Aluminium | – – – | 1 |

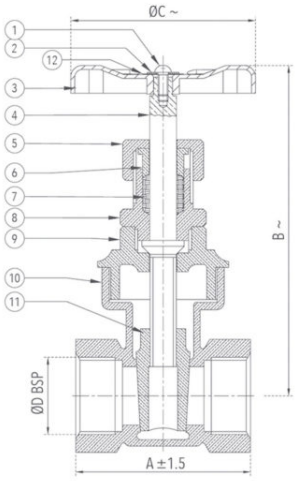


## Sizes / Dimensions

| Size (Inches) | Size (mm) | A ±1.5 | B ~ | ØC ~ | D |
|---|---|---|---|---|---|
| 1/4 | 8 | 50 | 84 | 50 | 1/4″ |
| 3/8 | 10 | 50 | 89 | 50 | 3/8″ |
| 1/2 | 15 | 60 | 105 | 60 | 1/2″ |
| 3/4 | 20 | 60 | 117 | 65 | 3/4″ |
| 1 | 25 | 70 | 132 | 70 | 1″ |
| 1 1/4 | 32 | 80 | 150 | 80 | 1 1/4″ |
| 1 1/2 | 40 | 90 | 165 | 90 | 1 1/2″ |
| 2 | 50 | 100 | 190 | 110 | 2″ |
| 2 1/2* | 65* | 105 | 232 | 117 | 2 1/2″ |
| 3* | 80* | 125 | 268 | 140 | 3″ |
| 4* | 100* | 160 | 332 | 160 | 4″ |

~ ±10

*Gland Nut for Size 65, 80 and 100 is of Bronze.

ZOLOTO INDUSTRIES
Zoloto House, 11th Milestone, Lambra, Nakodar Road,
Jalandhar – 144026. Punjab. INDIA
https://www.zolotovalves.com
Phones : +91 181 4676666 (100 Lines)
Facsimile: +91 181 2792500 & 2251600
Email : sales@zolotovalves.com, mktg@zolotovalves.com

ZOLOTO®
VALVES
since 1966

AN ISO 9001 CERTIFIED COMPANY

# 1035B Bronze Gate Valve Rising Stem (Screwed)

## Salient Features

- Screwed female ends to IS 554 / BS21 / ISO – 7.
- Screwed in Bonnet, Inside Screw, Rising Stem, Integral Seat, Solid Wedge.
- Provision for Re-packing under pressure.
- Designed sheet metal handwheel for a firm grip and convenient operation.
- Premium quality PTFE Gland Packing.

Test Pressure(Hydrostatic) Class-1 :
Shell : 1.5 Mpa
Seat & Back Seat : 1.0 Mpa
Maximum Working Temperature : 45°C

**Suitable For**
Water, Oil

## Materials

| P.No. | Name of Part | Material of Construction | Specification | Quantity |
|---|---|---|---|---|
| 1 | Body | Bronze | IS 318 Gr. LTB 2 | 1 |
| 2 | Wedge | Bronze | IS 318 Gr. LTB 2 | 1 |
| 3 | Stem | Forged Brass | IS 6912 Gr. LTB 2 | 1 |
| 4 | Bonnet | Bronze | IS 318 Gr. LTB 2 | 1 |
| 5 | Gland Packing | PTFE | – – – | – |
| 6 | Gland | Forged Brass | IS 6912 Gr. FLB | 1 |
| 7 | Gland Nut | Forged Brass | IS 6912 Gr. FLB | – |
| 8 | Hand Wheel | Sheet Metal (Powder Coated) | – – – | 1 |
| 9 | Name Plate | Aluminium | – – – | 1 |
| 10 | Washer | Carbon Steel (Zinc Plated) | – – – | 1 |
| 11 | Screw/Bolt | Carbon Steel (Zinc Plated) | – – – | 1 |

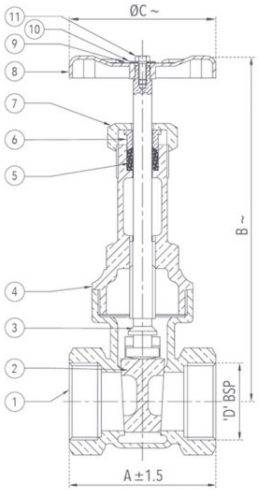


## Sizes / Dimensions

| Size (Inches) | Size (mm) | A ±1.5 | B ~ | ØC ~ | D |
|---|---|---|---|---|---|
| 1/2 | 15 | 60 | 120 | 60 | 1/2″ |
| 3/4 | 20 | 60 | 128 | 65 | 3/4″ |
| 1 | 25 | 70 | 150 | 70 | 1″ |
| 1 1/4 | 32 | 80 | 188 | 80 | 1 1/4″ |
| 1 1/2 | 40 | 90 | 214 | 90 | 1 1/2″ |
| 2 | 50 | 100 | 243 | 110 | 2″ |
| 2 1/2 | 65 | 105 | 310 | 115 | 2 1/2″ |
| 3 | 80 | 125 | 360 | 140 | 3″ |
| 4 | 100 | 160 | 432 | 160 | 4″ |

~ ±10

ZOLOTO INDUSTRIES
Zoloto House, 11th Milestone, Lambra, Nakodar Road,
Jalandhar – 144026. Punjab. INDIA
https://www.zolotovalves.com
Phones : +91 181 4676666 (100 Lines)
Facsimile: +91 181 2792500 & 2251600
Email : sales@zolotovalves.com, mktg@zolotovalves.com

ZOLOTO®
VALVES
since 1966

AN ISO 9001 CERTIFIED COMPANY

# 1036 Bronze Gate Valve (Flanged)

IS 778 CM/L-0624644

## Salient Features

- Flanged Ends to IS 778.
- Screwed in Bonnet, Inside Screw, Non-Rising Stem, Integral Seat, Solid Wedge.
- Designed sheet metal handwheel for a firm grip and convenient operation.
- Premium Quality PTFE Gland Packing.
- Provision for re-packing under pressure.
- Design Standard IS 778, Class-1.

Test Pressure (Hydrostatic) :
Shell : 1.5 MPa
Seat & Back Seat : 1.0 MPa
Maximum Working Temperature : 45°C

**Suitable For**
Water, Oil
*Also available with Open-Shut Indicator and Locking Device, at a nominal extra price.

## Materials

| P.No. | Name of Part | Material of Construction | Specification | Quantity |
|---|---|---|---|---|
| 1 | Screw / Bolt | Carbon Steel (Zinc Plated) | – – – | 1 |
| 2 | Washer | Carbon Steel (Zinc Plated) | – – – | 1 |
| 3 | Handwheel | Sheet Metal (Power Coated Paint) | – – – | 1 |
| 4 | Stem | Forged Brass | IS 6912 Gr. FLB | 1 |
| 5 | Gland Nut | Forged Brass | IS 6912 Gr. FLB | 1 |
| 6 | Gland | Forged Brass | IS 6912 Gr. FLB | 1 |
| 7 | Gland Packing | PTFE | – – – | – |
| 8 | Stuffing Box | Forged Brass | IS 6912 Gr. FLB | 1 |
| 9 | Bonnet | Forged Brass | IS 6912 Gr. FLB | 1 |
| 10 | Body | Bronze | IS 318 Gr. LTB 2 | 1 |
| 11 | Wedge | Bronze | IS 318 Gr. LTB 2 | 1 |
| 12 | Name Plate | Aluminium | – – – | 1 |

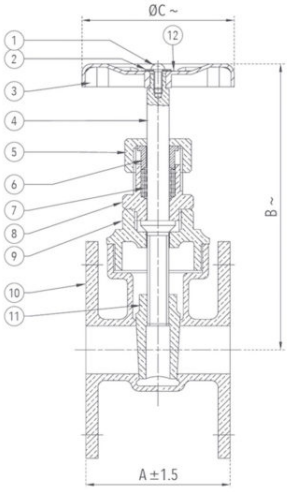


## Sizes / Dimensions

| Size (Inches) | Size (mm) | A ±1.5 | B ~ | ØC ~ |
|---|---|---|---|---|
| 1/2 | 15 | 72 | 105 | 60 |
| 3/4 | 20 | 76 | 117 | 65 |
| 1 | 25 | 90 | 132 | 70 |
| 1 1/4 | 32 | 100 | 140 | 80 |
| 1 1/2 | 40 | 110 | 172 | 90 |
| 2 | 50 | 120 | 190 | 110 |
| 2 1/2 | 65 | 140 | 214 | 115 |
| 3 | 80 | 150 | 268 | 140 |
| 4 | 100 | 190 | 323 | 160 |

~ ±10

ZOLOTO INDUSTRIES
Zoloto House, 11th Milestone, Lambra, Nakodar Road,
Jalandhar – 144026. Punjab. INDIA
https://www.zolotovalves.com
Phones : +91 181 4676666 (100 Lines)
Facsimile: +91 181 2792500 & 2251600
Email : sales@zolotovalves.com, mktg@zolotovalves.com

ZOLOTO®
VALVES
since 1966

AN ISO 9001 CERTIFIED COMPANY

# 1037 Bronze Vertical Check Valve (Screwed)

IS 778
CM/L-0624644

## Salient Features

- Screwed Female Ends to IS 554 / BS 21 / ISO 7.
- Single Piece Design.
- Meant for Vertical Lines Only.
- Permits flow in one direction and closes automatically if the flow reverses.
- Design Standard IS 778, Class-1.
- Also available with metal to metal seating.

Test Pressure (Hydrostatic) :
Shell : 1.5 MPa
Seat : 0.25 MPa
Maximum Working Temperature : 45°C

**Suitable For**
Water, Oil

## Materials

| P.No. | Name of Part | Material of Construction | Specification | Quantity |
|---|---|---|---|---|
| 1 | Body | Bronze | IS 318 Gr. LTB 2 | 1 |
| 2 | Disc | Bronze | IS 318 Gr. LTB 2 | 1 |
| 3 | Nut | Brass | IS 319 Gr. 2 (Half Hard) | 1 |
| 4 | Split Pin | Brass | – – – | 1 |
| 5 | 'O' Ring | Nitrile Rubber | IS 5192 – 1 | 1 |
| 6 | Spring | Stainless Steel | Type 304 | 1 |

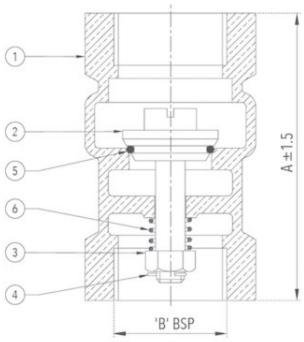


## Sizes / Dimensions

| Size (Inches) | Size (mm) | A ±1.5 | B |
|---|---|---|---|
| 1/2 | 15 | 65 | 1/2″ |
| 3/4 | 20 | 70 | 3/4″ |
| 1 | 25 | 75 | 1″ |
| 1 1/4 | 32 | 85 | 1 1/4″ |
| 1 1/2 | 40 | 95 | 1 1/2″ |
| 2 | 50 | 110 | 2″ |

ZOLOTO INDUSTRIES
Zoloto House, 11th Milestone, Lambra, Nakodar Road,
Jalandhar – 144026. Punjab. INDIA

https://www.zolotovalves.com

Phones : +91 181 4676666 (100 Lines)
Facsimile: +91 181 2792500 & 2251600
Email : sales@zolotovalves.com, mktg@zolotovalves.com

ZOLOTO®
VALVES
since 1966

AN ISO 9001 CERTIFIED COMPANY

# 1038 Bronze Horizontal Check Valve (Screwed) IS 778 CM/L-0624644

## Salient Features

- Screwed Female Ends to IS 554 / BS 21 / ISO 7.
- Screwed in Bonnet, meant for Horizontal Lines Only.
- Permits flow in one direction and shuts automatically if the flow reverses.
- Metal Disc is mushroom shaped with spherical seating surface.
- Disc is guided in Body as well as in Bonnet.
- Design Standard IS 778, Class-1.
- Also available with metal to metal seating.

Test Pressure (Hydrostatic) :
Shell : 1.5 MPa
Seat : 0.25 MPa
Maximum Working Temperature : 45°C

**Suitable For**
Water, Oil

## Materials

| P.No. | Name of Part | Material of Construction | Specification | Quantity |
|---|---|---|---|---|
| 1 | Body | Bronze | IS 318 Gr. LTB 2 | 1 |
| 2 | Disc | Bronze | IS 318 Gr. LTB 2 | 1 |
| 3 | Bonnet | Bronze / Forged Brass | IS 318 Gr. LTB 2 / IS 6912 Gr. FLB | 1 |
| 4 | 'O' Ring | Nitrile Rubber | IS 5192 – 1 | 1 |

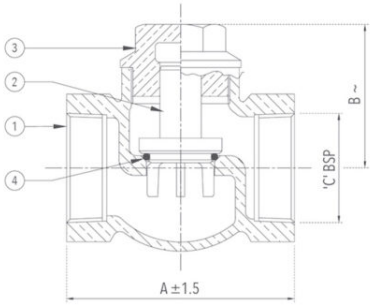


## Sizes / Dimensions

| Size (Inches) | Size (mm) | A ±1.5 | B ~ | C |
|---|---|---|---|---|
| 1/2* | 15* | 60 | 40 | 1/2″ |
| 3/4* | 20* | 70 | 45 | 3/4″ |
| 1* | 25* | 80 | 55 | 1″ |
| 1 1/4 | 32 | 95 | 59 | 1 1/4″ |
| 1 1/2 | 40 | 110 | 65 | 1 1/2″ |
| 2 | 50 | 125 | 74 | 2″ |
| 2 1/2 | 65 | 160 | 85 | 2 1/2″ |
| 3 | 80 | 180 | 105 | 3″ |
| 4 | 100 | 216 | 131 | 4″ |

~ ±10

*Bonnet for Size 15, 20 and 25 is of Forged Brass.

ZOLOTO INDUSTRIES
Zoloto House, 11th Milestone, Lambra, Nakodar Road,
Jalandhar – 144026. Punjab. INDIA
https://www.zolotovalves.com
Phones : +91 181 4676666 (100 Lines)
Facsimile: +91 181 2792500 & 2251600
Email : sales@zolotovalves.com, mktg@zolotovalves.com

ZOLOTO®
VALVES
since 1966

AN ISO 9001 CERTIFIED COMPANY

# 1039 Bronze Horizontal Check Valve (Flanged)

IS 778
CM/L-0624644

## Salient Features

- Flanged Ends to IS 778.
- Screwed in Bonnet, meant for Horizontal Lines Only.
- Permits flow in one direction and closes automatically if the flow reverses.
- Metal Disc is mushroom shaped with spherical seating surface.
- Disc is guided in Body as well as in Bonnet.
- Design Standard IS 778, Class-1.
- Also available with metal to metal seating.

Test Pressure (Hydrostatic) :
Shell : 1.5 MPa
Seat : 0.25 MPa
Maximum Working Temperature : 45°C

**Suitable For**
Water, Oil

## Materials

| P.No. | Name of Part | Material of Construction | Specification | Quantity |
|---|---|---|---|---|
| 1 | Body | Bronze | IS 318 Gr. LTB 2 | 1 |
| 2 | Disc | Bronze | IS 318 Gr. LTB 2 | 1 |
| 3 | Bonnet | Bronze / Forged Brass | IS 318 Gr. LTB 2 / IS 6912 Gr. FLB | 1 |
| 4 | 'O' Ring | Nitrile Rubber | IS 5192 – 1 | 1 |

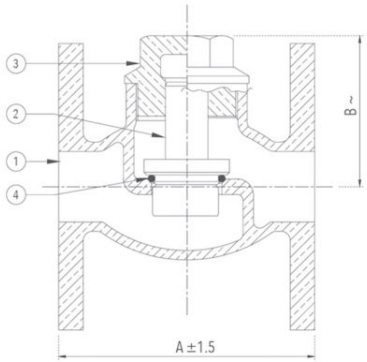


## Sizes / Dimensions

| Size (Inches) | Size (mm) | A ±1.5 | B ~ |
|---|---|---|---|
| 1/2* | 15* | 75 | 40 |
| 3/4* | 20* | 85 | 45 |
| 1* | 25* | 95 | 55 |
| 1 1/4 | 32 | 110 | 59 |
| 1 1/2 | 40 | 120 | 65 |
| 2 | 50 | 145 | 74 |
| 2 1/2 | 65 | 165 | 85 |
| 3 | 80 | 185 | 105 |
| 4 | 100 | 216 | 131 |

~ ±10

*Bonnet for Size 15, 20 and 25 is of Forged Brass.

ZOLOTO INDUSTRIES
Zoloto House, 11th Milestone, Lambra, Nakodar Road,
Jalandhar – 144026. Punjab. INDIA

https://www.zolotovalves.com

Phones : +91 181 4676666 (100 Lines)
Facsimile: +91 181 2792500 & 2251600
Email : sales@zolotovalves.com, mktg@zolotovalves.com

ZOLOTO®
VALVES
since 1966

AN ISO 9001 CERTIFIED COMPANY

# 1053A Forged Brass Y-Type Strainer (Screwed) PN 25

## Salient Features

- Screwed Female Ends to BSP.
- Stainless Steel (S.S 304) Ø1 mm perforated sheet screen is guided in the body and cover.
- Fine finish and smooth contours reduce pressure drop in the strainer.
- Large screening area makes the strainer efficient in performance.

Test Pressure (Hydrostatic) :
Shell : 35 kg/cm²g (500 psig)
Working Pressure : 25 kg/cm²g (350 psig)

**Suitable For**
Steam*, Water, Oil, Air*, Gases*
*Suitable for pressure upto 6.9 kg/cm²g (100 psig)

## Materials

| P.No. | Name of Part | Material of Construction | Specification | Quantity |
|---|---|---|---|---|
| 1 | Body | Forged Brass | IS 6912 Gr. FLB | 1 |
| 2 | Screen (Ø1 mm Perforation) | Stainless Steel | Type 304 | 1 |
| 3 | Gasket | PTFE | BS EN 12086-1 | 1 |
| 4 | Cover | Forged Brass | IS 6912 Gr. FLB | 1 |

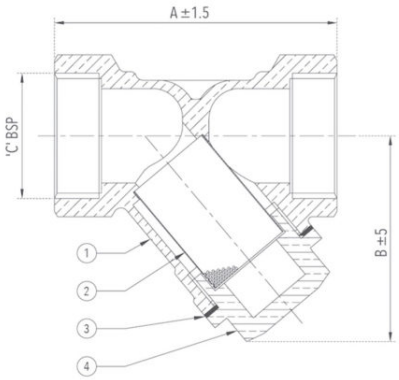


## Sizes / Dimensions

| Size (Inches) | Size (mm) | A ±1.5 | B ±5 | C |
|---|---|---|---|---|
| 1/2 | 15 | 54 | 45 | 1/2″ |
| 3/4 | 20 | 67.5 | 56 | 3/4″ |
| 1 | 25 | 75 | 56 | 1″ |
| 1 1/4 | 32 | 94 | 73 | 1 1/4″ |
| 1 1/2 | 40 | 100 | 80 | 1 1/2″ |
| 2 | 50 | 126 | 99 | 2″ |

ZOLOTO INDUSTRIES
Zoloto House, 11th Milestone, Lambra, Nakodar Road,
Jalandhar – 144026. Punjab. INDIA
https://www.zolotovalves.com
Phones : +91 181 4676666 (100 Lines)
Facsimile: +91 181 2792500 & 2251600
Email : sales@zolotovalves.com, mktg@zolotovalves.com

ZOLOTO®
VALVES
since 1966

AN ISO 9001 CERTIFIED COMPANY

# 1071 Cast Steel Globe Steam Stop Valve (Flanged) I.B.R

## Salient Features

- Flanged Ends to DIN 2545 PN 40.
- Straight Pattern, Outside Screw, Yoke Type, Rising Stem, Bolted Bonnet.
- Renewable 13% Cr. Stainless Steel (S.S 410) working parts.
- Minimum pressure drop inside the body due to streamlined body design.
- Handwheel Operated.
- Provision for re-packing under pressure.
- Suitable for thermic fluid application also.

Test Pressure (Hydrostatic) :
Shell : 60 bar (870 psig)
Maximum Working Pressure : 40 bar (580 psig)
Maximum Working Temperature : 425°C

**Suitable For**
Steam, Water, Oil

## Materials

| P.No. | Name of Part | Material of Construction | Specification | Qty. |
|---|---|---|---|---|
| 1 | Nut | Carbon Steel | – – – | 1 |
| 2 | Washer | Carbon Steel | – – – | 1 |
| 3 | Handwheel | S.G Iron | IS 1865 Gr. 400 / 15 | 1 |
| 4 | Stem | Stainless Steel | ASTM A 276 Type 410 | 1 |
| 5 | Yoke Bush | Aluminium Bronze | BS EN 1982 AB – 1 | 1 |
| 6 | Locking Screw | Carbon Steel | IS 1367 | 1 |
| 7 | Gland Flange | Cast Steel | IBR 73-80 Gr. B | 1 |
| 8 | Gland | Stainless Steel | ASTM A 276 Type 410 | 1 |
| 9 | Bonnet | Cast Steel | IBR 73-80 Gr. B | 1 |
| 10 | Gland Packing | Braided Graphite | – – – | – |
| 11 | Gasket | Spiral Wound S.S (Type 316) Graphite Filled | – – – | 1 |
| 12 | Back Seat Bush | Aluminium Bronze | BS EN 1982 AB – 1 | 1 |
| 13 | Stem Nut | Stainless Steel | ASTM A 276 Type 410 | 1 |
| 14 | Disc | Cast Steel | IBR 73-80 Gr. B | 1 |
| 15 | Seat Ring | Stainless Steel | ASTM A 276 Type 410 / ASTM A 182 Gr. F6a | 1 |
| 16 | Body Seat Ring | Stainless Steel | ASTM A 276 Type 410 / ASTM A 182 Gr. F6a | 1 |
| 17 | Body | Cast Steel | IBR 73-80 Gr. B | 1 |
| 18 | Nuts | H.T Steel | ASTM A 194 Gr. 2H | As Reqd |
| 19 | Studs | Alloy Steel | ASTM A 193 Gr. B7 | As Reqd |
| 20 | Nuts For Eye Bolts | H.T Steel | ASTMA 194 Gr. 2H | 2 |
| 21 | Eye Bolts | Stainless Steel | ASTM A 182 Gr. F6a | 2 |
| 22 | Pins For Eye Bolts | Stainless Steel | ASTM A 276 Type 410 | 2 |

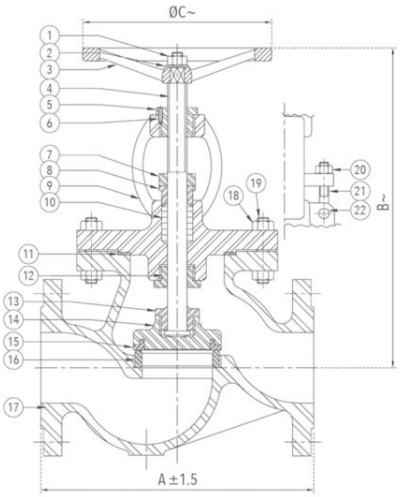


## Sizes / Dimensions

| Size (Inches) | Size (mm) | A ±1.5 | B ~ | ØC ~ |
|---|---|---|---|---|
| 1/2 | 15 | 130 | 190 | 120 |
| 3/4 | 20 | 150 | 190 | 120 |
| 1 | 25 | 160 | 215 | 150 |
| 1 1/4 | 32 | 180 | 230 | 150 |
| 1 1/2 | 40 | 200 | 259 | 180 |

ZOLOTO INDUSTRIES
Zoloto House, 11th Milestone, Lambra, Nakodar Road,
Jalandhar – 144026. Punjab. INDIA
https://www.zolotovalves.com
Phones : +91 181 4676666 (100 Lines)
Facsimile: +91 181 2792500 & 2251600
Email : sales@zolotovalves.com, mktg@zolotovalves.com

| Size (Inches) | Size (mm) | A ±1.5 | B ~ | ØC ~ |
|---|---|---|---|---|
| 2 | 50 | 230 | 272 | 180 |
| 2 1/2 | 65 | 290 | 316 | 200 |
| 3 | 80 | 310 | 341 | 235 |
| 4 | 100 | 350 | 395 | 295 |
| 6 | 150 | 480 | 500 | 350 |
| 8 | 200 | 600 | 525 | 435 |

~ ±10

ZOLOTO INDUSTRIES
Zoloto House, 11th Milestone, Lambra, Nakodar Road,
Jalandhar – 144026. Punjab. INDIA
https://www.zolotovalves.com
Phones : +91 181 4676666 (100 Lines)
Facsimile: +91 181 2792500 & 2251600
Email : sales@zolotovalves.com, mktg@zolotovalves.com

ZOLOTO®
VALVES
since 1966

AN ISO 9001 CERTIFIED COMPANY

# 1072 Cast Steel Horizontal Lift Check Valve (Flanged) I.B.R

## Salient Features

- Flanged Ends to DIN 2545 PN 40.
- Bolted Cover, Straight Pattern.
- Renewable 13% Cr. Stainless Steel (S.S 410) working parts.
- Minimum pressure drop inside the body due to well contoured body design.
- Suitable for thermic fluid application also.

Test Pressure (Hydrostatic) :
Shell : 60 bar (870 psig)
Maximum Working Pressure : 40 bar (580 psig)
Maximum Working Temperature : 425°C

**Suitable For**
Steam, Water, Oil

## Materials

| P.No. | Name of Part | Material of Material | Specification | Qty. |
|---|---|---|---|---|
| 1 | Body | Cast Steel | IBR 73-80 Gr. B | 1 |
| 2 | Body Seat Ring | Stainless Steel | ASTM A 276 Type 410 | 1 |
| 3 | Disc Ring | Stainless Steel | ASTM A 276 Type 410 | 1 |
| 4 | Disc | Cast Steel | IBR 73 – 80 Gr. B | 1 |
| 5 | Gasket | Spiral Wound S.S. (Type 316) Graphite Filled | – – – | 1 |
| 6 | Cover | Cast Steel | IBR 73-80 Gr. B | 1 |
| 7 | Nuts | H.T. Steel | ASTM A 194 Gr. 2H | As Reqd. |
| 8 | Studs | Alloy Steel | ASTM A 193 Gr. B7 | As Reqd. |

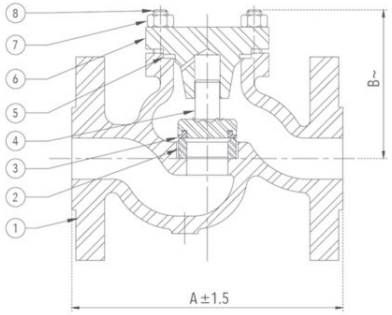


## Sizes / Dimensions

| Size (Inches) | Size (mm) | A ±1.5 | B ~ |
|---|---|---|---|
| 1/2 | 15 | 130 | 86 |
| 3/4 | 20 | 150 | 86 |
| 1 | 25 | 160 | 100 |
| 1 1/4 | 32 | 180 | 102 |
| 1 1/2 | 40 | 200 | 113 |
| 2 | 50 | 230 | 123 |
| 2 1/2 | 65 | 290 | 155 |
| 3 | 80 | 310 | 170 |
| 4 | 100 | 350 | 192 |
| 6 | 150 | 480 | 250 |
| 8 | 200 | 600 | 275 |

~ ±10

ZOLOTO INDUSTRIES
Zoloto House, 11th Milestone, Lambra, Nakodar Road,
Jalandhar – 144026. Punjab. INDIA
https://www.zolotovalves.com
Phones : +91 181 4676666 (100 Lines)
Facsimile: +91 181 2792500 & 2251600
Email : sales@zolotovalves.com, mktg@zolotovalves.com

ZOLOTO®
VALVES
since 1966

AN ISO 9001 CERTIFIED COMPANY

# 1073 Cast Steel Y-Type Strainer (Flanged) I.B.R

## Salient Features

- Flanged Ends to BS 10 Table 'J'.
- Stainless Steel (S.S 304) perforated sheet screen (Ø1 mm Perforation) is guided in body and cover.
- Drain Plug to remove the accumulated foreign particles.
- Fine finish and smooth contours to minimize pressure drop inside the strainer.
- Large screening area makes the strainer more efficient.
- Suitable for thermic fluid application also.

Test Pressure (Hydrostatic) : 49 kg/cm²g (700 psig)
Maximum Working Pressure (Steam) : 24.60 kg/cm²g (350 psig)
Maximum Working Temperature : 425°C

**Suitable For**
Steam, Water, Oil

## Materials

| P.No. | Name of Part | Material of Construction | Specification | Qty. |
|---|---|---|---|---|
| 1 | Body | Cast Steel | IBR 73 – 80 Gr. B | 1 |
| 2 | Screen (Ø1 mm Perforation) | Stainless Steel | Type 304 | 1 |
| 3 | Gasket | Steam Jointing Sheet | IS 2712 Gr. W/3 | 1 |
| 4 | Bonnet | Cast Steel | IBR 73-80 Gr. B | 1 |
| 5 | Nuts | H.T Steel | ASTM A 194 Gr. 2H | As Reqd |
| 6 | Studs | Alloy Steel | ASTM A 193 Gr. B7 | As Reqd |
| 7 | Gasket | Steam Jointing Sheet | IS 2712 Gr. W/3 | 1 |
| 8 | Plug | Bronze | IS 318 Gr. LTB2 | 1 |

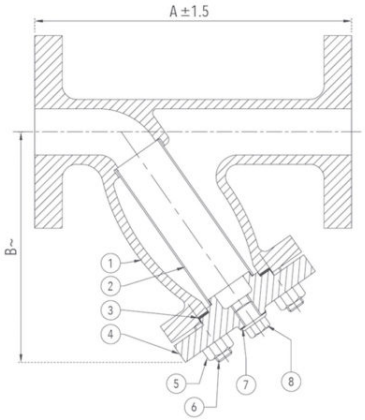


## Sizes / Dimensions

| Size (Inches) | Size (mm) | A ±1.5 | B ~ |
|---|---|---|---|
| 1 | 25 | 181 | 135 |
| 1 1/4 | 32 | 222 | 170 |
| 1 1/2 | 40 | 260 | 200 |
| 2 | 50 | 276 | 225 |
| 2 1/2 | 65 | 286 | 250 |
| 3 | 80 | 296 | 280 |
| 4 | 100 | 403 | 312 |
| 6 | 150 | 476 | 364 |

~ ±10

ZOLOTO INDUSTRIES
Zoloto House, 11th Milestone, Lambra, Nakodar Road,
Jalandhar – 144026. Punjab. INDIA
https://www.zolotovalves.com
Phones : +91 181 4676666 (100 Lines)
Facsimile: +91 181 2792500 & 2251600
Email : sales@zolotovalves.com, mktg@zolotovalves.com

ZOLOTO®
VALVES
since 1966

AN ISO 9001 CERTIFIED COMPANY

# 1074 Forged Steel Globe Valve, Class-800 (Standard Bore) I.B.R

## Salient Features

- Design Standard API 602 / BSEN ISO 15761 (BS 5352).
- Body and Bonnet are Phosphated, to ensure maximum resistance from rust.
- Bolted Bonnet, Outside Screw, Yoke Type, Rising Stem.
- Screwed Female Ends to BSPT / NPT / Socket Welded to ANSI B16.11.

Test Pressure :
Shell (Hydrostatic) : 207 bar (3000 psig)
Seat & Back Seat(Hydrostatic) : 152 bar (2200 psig)
Seat (Pneumatic) : 6.9 bar (100 psig)
Maximum Working Temperature : 425°C

**Suitable For**
Steam, Water, Oil, Air, Gases

## Materials

| P.No. | Name of Part | Material of Construction | Specification | Qty. |
|---|---|---|---|---|
| 1 | Body | Forged Carbon Steel | ASTM A 105 | 1 |
| 2 | Body Seat Ring | Stainless Steel | ASTM A 276 Type 410 / ASTM A 182 Gr. F6a | 1 |
| 3 | Disc | Stainless Steel | ASTM A 276 Type 410 | 1 |
| 4 | Stem | Stainless Steel | ASTM A 276 Type 410 / ASTM A 182 Gr. F6a | 1 |
| 5 | Check Nut | Stainless Steel | ASTM A 276 Type 410 | 1 |
| 6 | Gasket | Spiral Wound S.S (Type 316) Graphite Filled | – – – | 1 |
| 7 | Bonnet | Forged Carbon Steel | ASTM A 105 | 1 |
| 8 | Bonnet Nut | Alloy Steel | ASTM A 194 Gr. 2H | 4 |
| 9 | Stud | Alloy Steel | ASTM A 193 Gr. B7 | 4 |
| 10 | Gland Packing | Non Asbestos Graphite With Corrosion Inhibitor | – – – | |
| 11 | Gland | Stainless Steel | ASTM A 276 Type 410 | 1 |
| 12 | Gland Flange | Carbon Steel | – – – | 1 |
| 13 | Eye Bolt | Stainless Steel | ASTM A 276 Type 410 / ASTM A 182 Gr. F6a | 2 |
| 14 | Nut | Alloy Steel | ASTM A 194 Gr. 2H | 2 |
| 15 | Washer | Carbon Steel | – – – | 2 |
| 16 | Screw | Carbon Steel | – – – | 2 |
| 17 | Yoke Bush | Aluminium Bronze | BS EN 1982 AB – 1 | 1 |
| 18 | Handwheel | Ductile Iron | ASTM A536 / IS 1865 | 1 |
| 19 | Washer | Carbon Steel | – – – | 1 |
| 20 | Handwheel Nut | Carbon Steel | – – – | 1 |
| 21 | Identification Plate | Aluminium | – – – | 1 |

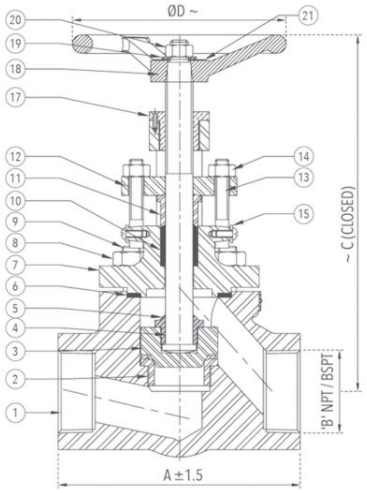


## Sizes / Dimensions

| Size (Inches) | Size (mm) | A ±1.5 | B | C ~ | ØD ~ |
|---|---|---|---|---|---|
| 1/2 | 15 | 85 | 1/2″ | 156 | 95 |
| 3/4 | 20 | 86 | 3/4″ | 156 | 95 |
| 1 | 25 | 101 | 1″ | 183 | 95 |
| 1 1/4 | 32 | 140 | 1 1/4″ | 250 | 155 |
| 1 1/2 | 40 | 140 | 1 1/2″ | 250 | 155 |
| 2 | 50 | 164 | 2″ | 250 | 155 |

ZOLOTO INDUSTRIES
Zoloto House, 11th Milestone, Lambra, Nakodar Road,
Jalandhar – 144026. Punjab. INDIA
https://www.zolotovalves.com
Phones : +91 181 4676666 (100 Lines)
Facsimile: +91 181 2792500 & 2251600
Email : sales@zolotovalves.com, mktg@zolotovalves.com

~ ±10

ZOLOTO®
VALVES
since 1966

AN ISO 9001 CERTIFIED COMPANY

# 1074A Forged Steel Globe Valve, Class-800 (Full Bore) I.B.R

## Salient Features

- Design Standard API 602 / BS EN ISO 15761 (BS 5352).
- Body and Bonnet are Phosphated, to ensure maximum resistance from rust.
- Bolted Bonnet, Outside Screw, Yoke Type, Rising Stem.
- Screwed Female Ends to BSPT / NPT / Socket Welded to ANSI B16.11.

Test Pressure :
Shell (Hydrostatic) : 207 bar (3000 psig)
Seat & Back Seat(Hydrostatic) : 152 bar (2200 psig)
Seat (Pneumatic) : 6.9 bar (100 psig)
Maximum Working Temperature : 425°C

**Suitable For**
Steam, Water, Oil, Air, Gases

## Materials

| P.No. | Name of Part | Material of Construction | Specification | Qty. |
|---|---|---|---|---|
| 1 | Body | Forged Carbon Steel | ASTM A 105 | 1 |
| 2 | Body Seat Ring | Stainless Steel | ASTM A 276 Type 410 / ASTM A 182 Gr. F6a | 1 |
| 3 | Disc | Stainless Steel | ASTM A 276 Type 410 | 1 |
| 4 | Stem | Stainless Steel | ASTM A 276 Type 410 / ASTM A 182 Gr. F6a | 1 |
| 5 | Check Nut | Stainless Steel | ASTM A 276 Type 410 | 1 |
| 6 | Gasket | Spiral Wound S.S (Type 316) Graphite Filled | - - - | 1 |
| 7 | Bonnet | Forged Carbon Steel | ASTM A 105 | 1 |
| 8 | Bonnet Nut | Alloy Steel | ASTM A 194 Gr. 2H | 4 |
| 9 | Stud | Alloy Steel | ASTM A 193 Gr. B7 | 4 |
| 10 | Gland Packing | Non Asbestos Graphite With Corrosion Inhibitor | - - - | |
| 11 | Gland | Stainless Steel | ASTM A 276 Type 410 | 1 |
| 12 | Gland Flange | Carbon Steel | - - - | 1 |
| 13 | Eye Bolt | Stainless Steel | ASTM A 276 Type 410 / ASTM A 182 Gr. F6a | 2 |
| 14 | Nut | Alloy Steel | ASTM A 194 Gr. 2H | 2 |
| 15 | Washer | Carbon Steel | - - - | 2 |
| 16 | Screw | Carbon Steel | - - - | 2 |
| 17 | Yoke Bush | Aluminium Bronze | BS EN 1982 AB – 1 | 1 |
| 18 | Handwheel | Ductile Iron | ASTM A536 / IS 1865 | 1 |
| 19 | Washer | Carbon Steel | - - - | 1 |
| 20 | Handwheel Nut | Carbon Steel | - - - | 1 |
| 21 | Identification Plate | Aluminium | - - - | 1 |

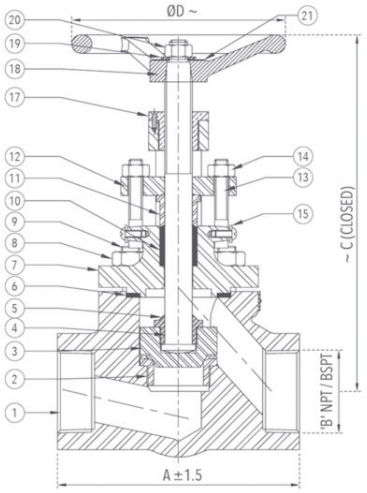


## Sizes / Dimensions

| Size (Inches) | Size (mm) | A ±1.5 | B | C ~ | ØD ~ |
|---|---|---|---|---|---|
| 3/8 | 10 | 85 | 3/8″ | 156 | 95 |
| 1/2 | 15 | 86 | 1/2″ | 156 | 95 |
| 3/4 | 20 | 101 | 3/4″ | 183 | 95 |
| 1 | 25 | 140 | 1″ | 250 | 155 |
| 1 1/4 | 32 | 140 | 1 1/4″ | 250 | 155 |
| 1 1/2 | 40 | 164 | 1 1/2″ | 250 | 155 |

ZOLOTO INDUSTRIES
Zoloto House, 11th Milestone, Lambra, Nakodar Road,
Jalandhar – 144026. Punjab. INDIA
https://www.zolotovalves.com
Phones : +91 181 4676666 (100 Lines)
Facsimile: +91 181 2792500 & 2251600
Email : sales@zolotovalves.com, mktg@zolotovalves.com

~ ±10

ZOLOTO®
VALVES
since 1966

AN ISO 9001 CERTIFIED COMPANY

# 1075 Forged Steel Gate Valve, Class-800 (Standard Bore) I.B.R

## Salient Features

- Design Standard API 602 / BS EN ISO 15761 (BS 5352).
- Body and Bonnet are Phosphated, to ensure maximum resistance from rust.
- Bolted Bonnet, Outside Screw, Yoke Type, Rising Stem.
- Screwed Female Ends to BSPT / NPT / Socket Welded to ANSI B16.11.

Test Pressure :
Shell (Hydrostatic) : 207 bar (3000 psig)
Seat & Back Seat(Hydrostatic) : 152 bar (2200 psig)
Seat (Pneumatic) : 6.9 bar (100 psig)
Maximum Working Temperature : 425°C

**Suitable For**
Steam, Water, Oil

## Materials

| P.No. | Name of Part | Material of Construction | Specification | Qty. |
|---|---|---|---|---|
| 1 | Body | Forged Carbon Steel | ASTM A 105 | 1 |
| 2 | Body Seat Ring | Stainless Steel | ASTM A276 Type 410 / ASTM A 182 Gr. F6a | 2 |
| 3 | Wedge (Solid) | Stainless Steel | ASTM A217 Gr. CA 15 | 1 |
| 4 | Stem | Stainless Steel | ASTM A276 Type 410 / ASTM A 182 Gr. F6a | 1 |
| 5 | Gasket | Spiral Wound S.S (Type 316) Graphite Filled | – – – | 1 |
| 6 | Bonnet | Forged Carbon Steel | ASTM A 105 | 1 |
| 7 | Bonnet Nut | Alloy Steel | ASTM A 194 Gr. 2H | 4 |
| 8 | Stud | Alloy Steel | ASTM A 193 Gr. B7 | 4 |
| 9 | Gland Packing | Non Asbestos Graphite With Corrosion Inhibitor | – – – | |
| 10 | Gland | Stainless Steel | ASTM A276 Type 410. | 1 |
| 11 | Gland Flange | Carbon Steel | – – – | 1 |
| 12 | Eye Bolt | Stainless Steel | ASTM A276 Type 410 / ASTM A 182 Gr. F6a | 2 |
| 13 | Nut | Alloy Steel | ASTM A194 Gr. 2H | 2 |
| 14 | Yoke Sleeve | Aluminium Bronze | BSEN 1982 AB – 1 | 1 |
| 15 | Handwheel | Ductile Iron | ASTM A 536 / IS 1865 | 1 |
| 16 | Identification Plate | Aluminium | – – – | 1 |
| 17 | Check Nut | Stainless Steel | ASTM A 276 Type 410 | 1 |
| 18 | Washer | Carbon Steel | – – – | 2 |
| 19 | Screw | Carbon Steel | – – – | 2 |

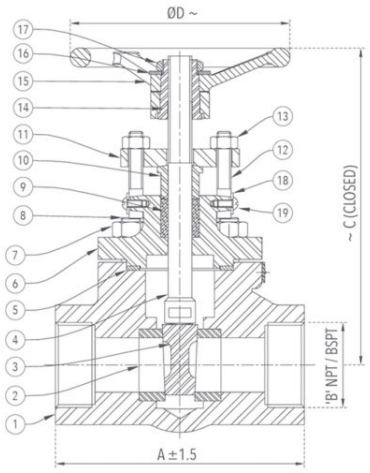


## Sizes / Dimensions

| Size (Inches) | Size (mm) | A ±1.5 | B | C ~ | ØD ~ |
|---|---|---|---|---|---|
| 1/2 | 15 | 85 | 1/2″ | 143 | 85 |
| 3/4 | 20 | 86 | 3/4″ | 146 | 85 |
| 1 | 25 | 101 | 1″ | 162 | 95 |
| 1 1/4 | 32 | 140 | 1 1/4″ | 226 | 155 |
| 1 1/2 | 40 | 140 | 1 1/2″ | 226 | 155 |
| 2 | 50 | 164 | 2″ | 230 | 155 |

~ ±10

ZOLOTO INDUSTRIES
Zoloto House, 11th Milestone, Lambra, Nakodar Road,
Jalandhar – 144026. Punjab. INDIA
https://www.zolotovalves.com
Phones : +91 181 4676666 (100 Lines)
Facsimile: +91 181 2792500 & 2251600
Email : sales@zolotovalves.com, mktg@zolotovalves.com

ZOLOTO®
VALVES
since 1966

AN ISO 9001 CERTIFIED COMPANY

# 1075A Forged Steel Gate Valve, Class-800 (Full Bore) I.B.R

## Salient Features

- Design Standard API 602 / BS EN ISO 15761 (BS 5352).
- Body and Bonnet are Phosphated, to ensure maximum resistance from rust.
- Bolted Bonnet, Outside Screw, Yoke Type, Rising Stem.
- Screwed Female Ends to BSPT / NPT / Socket Welded to ANSI B16.11.

Test Pressure :
Shell (Hydrostatic) : 207 bar (3000 psig)
Seat & Back Seat(Hydrostatic) : 152 bar (2200 psig)
Seat (Pneumatic) : 6.9 bar (100 psig)
Maximum Working Temperature : 425°C

**Suitable For**
Steam, Water, Oil

## Materials

| P.No. | Name of Part | Material of Construction | Specification | Qty. |
|---|---|---|---|---|
| 1 | Body | Forged Carbon Steel | ASTM A 105 | 1 |
| 2 | Body Seat Ring | Stainless Steel | ASTM A276 Type 410 / ASTM A 182 Gr. F6a | 2 |
| 3 | Wedge (Solid) | Stainless Steel | ASTM A217 Gr. CA 15 | 1 |
| 4 | Stem | Stainless Steel | ASTM A276 Type 410 / ASTM A 182 Gr. F6a | 1 |
| 5 | Gasket | Spiral Wound S.S. (Type 316) Graphite Filled | – – – | 1 |
| 6 | Bonnet | Forged Carbon Steel | ASTM A 105 | 1 |
| 7 | Bonnet Nut | Alloy Steel | ASTM A 194 Gr. 2H | 4 |
| 8 | Stud | Alloy Steel | ASTM A 193 Gr. B7 | 4 |
| 9 | Gland Packing | Non Asbestos Graphite With Corrosion Inhibitor | – – – | |
| 10 | Gland | Stainless Steel | ASTM A276 Type 410. | 1 |
| 11 | Gland Flange | Carbon Steel | – – – | 1 |
| 12 | Eye Bolt | Stainless Steel | ASTM A276 Type 410 / ASTM A 182 Gr. F6a | 2 |
| 13 | Nut | Alloy Steel | ASTM A194 Gr. 2H | 2 |
| 14 | Yoke Sleeve | Aluminium Bronze | BSEN 1982 AB – 1 | 1 |
| 15 | Handwheel | Ductile Iron | ASTM A 536 / IS 1865 | 1 |
| 16 | Identification Plate | Aluminium | – – – | 1 |
| 17 | Check Nut | Stainless Steel | ASTM A 276 Type 410 | 1 |
| 18 | Washer | Carbon Steel | – – – | 2 |
| 19 | Screw | Carbon Steel | – – – | 2 |

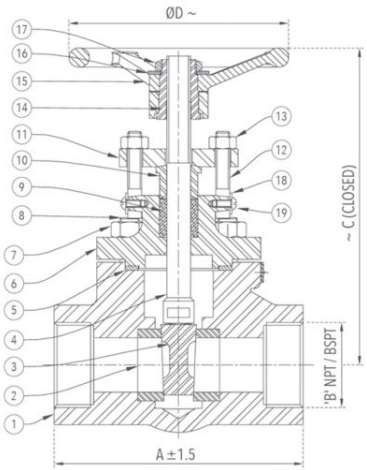


## Sizes / Dimensions

| Size (Inches) | Size (mm) | A ±1.5 | B | C ~ | ØD ~ |
|---|---|---|---|---|---|
| 3/8 | 10 | 85 | 3/8″ | 143 | 85 |
| 1/2 | 15 | 86 | 1/2″ | 146 | 85 |
| 3/4 | 20 | 101 | 3/4″ | 162 | 95 |
| 1 | 25 | 140 | 1″ | 226 | 155 |
| 1 1/4 | 32 | 140 | 1 1/4″ | 226 | 155 |
| 1 1/2 | 40 | 164 | 1 1/2″ | 230 | 155 |

~ ±10

ZOLOTO INDUSTRIES
Zoloto House, 11th Milestone, Lambra, Nakodar Road,
Jalandhar – 144026. Punjab. INDIA
https://www.zolotovalves.com
Phones : +91 181 4676666 (100 Lines)
Facsimile: +91 181 2792500 & 2251600
Email : sales@zolotovalves.com, mktg@zolotovalves.com

ZOLOTO®
VALVES
since 1966

AN ISO 9001 CERTIFIED COMPANY

# 1076 Forged Steel Horizontal Lift Check Valve, Class-800 (Standard Bore)

## Salient Features

- Design Standard API 602/BS EN ISO 15761 (BS 5352).
- Body and Cover are Phosphated, to ensure maximum protection from rust.
- Bolted Cover.
- Screwed Female Ends to BSPT / NPT / Socket Welded to ANSI B16.11.

Test Pressure (Hydrostatic) :
Shell : 207 bar (3000 psig)
Seat : 152 bar (2200 psig)
Maximum Working Temperature : 425°C

**Suitable For**
Steam, Water, Oil

## Materials

| P.No. | Name of Part | Material of Construction | Specification | Qty. |
|---|---|---|---|---|
| 1 | Body | Forged Carbon Steel | ASTM A 105 | 1 |
| 2 | Body Seat Ring | Stainless Steel | ASTM A 276 Type 410 / ASTM A182 Gr. F6a | 1 |
| 3 | Disc | Stainless Steel | ASTM A 276 Type 410 | 1 |
| 4 | Gasket | Spiral Wound (Type 316) Graphite Filled | - - - | 1 |
| 5 | Cover | Forged Carbon Steel | ASTM A 105 | 1 |
| 6 | Stud | Alloy Steel | ASTM A 193 Gr. B7 | 4 |
| 7 | Nut | Alloy Steel | ASTM A 194 Gr. 2H | 4 |
| 8 | Identification Plate | Aluminium | - - - | 1 |

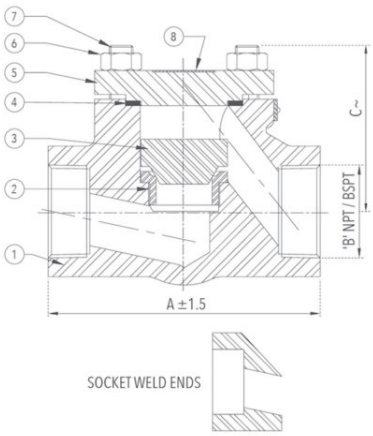


## Sizes / Dimensions

| Size (Inches) | Size (mm) | A ±1.5 | B | C ~ |
|---|---|---|---|---|
| 1/2 | 15 | 85 | 1/2″ | 61 |
| 3/4 | 20 | 86 | 3/4″ | 61 |
| 1 | 25 | 101 | 1″ | 76 |
| 1 1/4 | 32 | 140 | 1 1/4″ | 105 |
| 1 1/2 | 40 | 140 | 1 1/2″ | 105 |
| 2 | 50 | 164 | 2″ | 105 |

~ ±10

ZOLOTO INDUSTRIES
Zoloto House, 11th Milestone, Lambra, Nakodar Road,
Jalandhar – 144026. Punjab. INDIA
https://www.zolotovalves.com
Phones : +91 181 4676666 (100 Lines)
Facsimile: +91 181 2792500 & 2251600
Email : sales@zolotovalves.com, mktg@zolotovalves.com

ZOLOTO®
VALVES
since 1966

AN ISO 9001 CERTIFIED COMPANY

# 1076A Forged Steel Horizontal Lift Check Valve, Class-800 (Full Bore) I.B.R

## Salient Features

- Design Standard API 602 / BS EN ISO 15761 (BS 5352).
- Body and Cover are Phosphated, to ensure maximum protection from rust.
- Bolted Cover.
- Screwed Female Ends to BSPT / NPT / Socket Welded to ANSI B16.11.

Test Pressure (Hydrostatic) :
Shell : 207 bar (3000 psig)
Seat : 152 bar (2200 psig)
Maximum Working Temperature : 425°C

**Suitable For**
Steam, Water, Oil

## Materials

| P.No. | Name of Part | Material of Construction | Specification | Qty. |
|---|---|---|---|---|
| 1 | Body | Forged Carbon Steel | ASTM A 105 | 1 |
| 2 | Body Seat Ring | Stainless Steel | ASTM A 276 Type 410 / ASTM A182 Gr. F6a | 1 |
| 3 | Disc | Stainless Steel | ASTM A 276 Type 410 | 1 |
| 4 | Gasket | Spiral Wound (Type 316) Graphite Filled | - - - | 1 |
| 5 | Cover | Forged Carbon Steel | ASTM A 105 | 1 |
| 6 | Stud | Alloy Steel | ASTM A 193 Gr. B7 | 4 |
| 7 | Nut | Alloy Steel | ASTM A 194 Gr. 2H | 4 |
| 8 | Identification Plate | Aluminium | - - - | 1 |

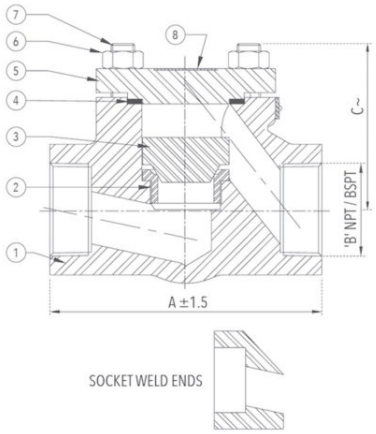


## Sizes / Dimensions

| Size (Inches) | Size (mm) | A ±1.5 | B | C ~ |
|---|---|---|---|---|
| 3/8 | 10 | 85 | 3/8″ | 61 |
| 1/2 | 15 | 86 | 1/2″ | 61 |
| 3/4 | 20 | 101 | 3/4″ | 76 |
| 1 | 25 | 140 | 1″ | 105 |
| 1 1/4 | 32 | 140 | 1 1/4″ | 105 |
| 1 1/2 | 40 | 164 | 1 1/2″ | 105 |

~ ±10

ZOLOTO INDUSTRIES
Zoloto House, 11th Milestone, Lambra, Nakodar Road,
Jalandhar – 144026. Punjab. INDIA
https://www.zolotovalves.com
Phones : +91 181 4676666 (100 Lines)
Facsimile: +91 181 2792500 & 2251600
Email : sales@zolotovalves.com, mktg@zolotovalves.com

ZOLOTO®
VALVES
since 1966

AN ISO 9001 CERTIFIED COMPANY

# 1077 Cast Steel Gate Valve, Class-150 (Flanged) I.B.R

## Salient Features

- Design Standard BS EN ISO 10434 / API 600.
- Bolted Bonnet, Outside Screw, Yoke Type, Rising Stem.
- Renewable 13% Cr. Stainless Steel (S.S 410) working parts.
- Handwheel Operated.
- Flanged Ends as per ASME B 16.5 Class-150.

Test Pressure (Hydrostatic) :
Shell : 31 kg/cm²g (425 psig)
Seat : 21kg/cm²g (313 psig)
Seat (Steam) : 10.55 kg/cm²g (150 psig)
Maximum Working Temperature : 425°C

**Suitable For**
Steam, Water, Oil

## Materials

| P.No. | Name of Part | Material of Construction | Specification | Qty. |
|---|---|---|---|---|
| 1 | Body | Cast Steel | ASTM A 216 Gr. WCB | 1 |
| 2 | Body Seat Ring | Stainless Steel | ASTM A 276 Type 410 / ASTM A 182 Gr. F6a | 2 |
| 3 | Wedge | Cast Steel | ASTM A 216 Gr. WCB | 1 |
| 4 | Wedge Facing Ring | Stainless Steel | ASTM A 276 Type 410 / ASTM A 182 Gr. F6a | 2 |
| 5 | Stem | Stainless Steel | ASTM A 276 Type 410 / ASTM A 182 Gr. F6a | 1 |
| 6 | Studs | Alloy Steel | ASTM A 193 Gr. B7 | As Reqd. |
| 7 | Nuts | H.T. Steel | ASTM A 194 Gr. 2H | As Reqd. |
| 8 | Gasket | Steam Jointing Sheet | IS 2712 Gr. W/3 | 1 |
| 9 | Back Seat Bush | Aluminium Bronze | BS EN 1982 Gr. AB – 1 | 1 |
| 10 | Gland Packing | Braided Graphite | IS 4687 | – |
| 11 | Pin For Eye Bolt | Stainless Steel | ASTM A 276 Type 410 | 2 |
| 12 | Gland | Stainless Steel | ASTM A 276 Type 410 | 1 |
| 13 | Gland Flange | Carbon Steel | – – – | 1 |
| 14 | Nuts | H.T Steel | ASTM A 194 Gr. 2H | 2 |
| 15 | Eye Bolts | Stainless Steel | ASTM A 276 Type 410 | 2 |
| 16 | Bonnet | Carbon Steel | ASTM A 216 Gr. WCB | 1 |
| 17 | Sleeve Nut | Stainless Steel | ASTM A 276 Type 410 | 1 |
| 18 | Handwheel | Nodular Iron | ASTM A 439 D2 | 1 |
| 19 | Yoke Sleeve | S.G Iron | IS 1865 Gr. 400 / 15 | 1 |
| 20 | Handwheel Nut | Carbon Steel | – – – | 1 |
| 21 | Grease Nipple | Carbon Steel | – – – | 1 |

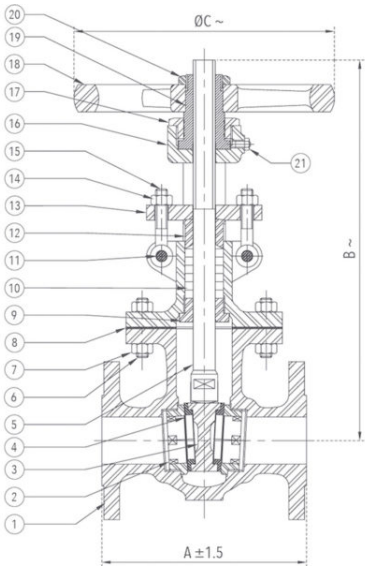


## Sizes / Dimensions

| Size (Inches) | Size (mm) | A ±1.5 | B ~ | ØC ~ |
|---|---|---|---|---|
| 1 1/2 | 40 | 165 | 330 | 210 |
| 2 | 50 | 178 | 340 | 210 |
| 2 1/2 | 65 | 190 | 395 | 210 |
| 3 | 80 | 203 | 430 | 225 |
| 4 | 100 | 229 | 521 | 255 |

ZOLOTO INDUSTRIES
Zoloto House, 11th Milestone, Lambra, Nakodar Road,
Jalandhar – 144026. Punjab. INDIA
https://www.zolotovalves.com
Phones : +91 181 4676666 (100 Lines)
Facsimile: +91 181 2792500 & 2251600
Email : sales@zolotovalves.com, mktg@zolotovalves.com

| Size (Inches) | Size (mm) | A ±1.5 | B ~ | ØC ~ |
|---|---|---|---|---|
| 5 | 125 | 254 | 568 | 255 |
| 6 | 150 | 267 | 666 | 356 |
| 8 | 200 | 292 | 783 | 400 |

~ ±10

ZOLOTO INDUSTRIES
Zoloto House, 11th Milestone, Lambra, Nakodar Road,
Jalandhar – 144026. Punjab. INDIA
https://www.zolotovalves.com
Phones : +91 181 4676666 (100 Lines)
Facsimile: +91 181 2792500 & 2251600
Email : sales@zolotovalves.com, mktg@zolotovalves.com

ZOLOTO®
VALVES
since 1966

AN ISO 9001 CERTIFIED COMPANY

# 1080A Stainless Steel (CF8M / S.S 316) Three Piece Design Ball Valve, Class-150 (Screwed)

## Salient Features

- Design Standard BS EN ISO 17292 (BS 5351).
- Screwed Female Ends to BSPT / NPT / Socket Weld.
- Reduced Bore, Three Piece Design.
- Superb in Quality and Performance.

Test Pressure (Hydrostatic) :
Shell : 31 kg/cm²g (440 psig)
Maximum Working Pressure : 21 kg/cm²g (300 psig)
Seat (Pneumatic) : 7kg/cm²g (100 psig)
Maximum Working Temperature : 220°C

**Suitable For**
Steam, Water, Oil, Air, Gases

## Materials

| P.No. | Name of Part | Material of Construction | Specification | Qty. |
|---|---|---|---|---|
| 1 | Body | Stainless Steel | ASTM A 351 Gr. CF8M | 1 |
| 2 | Ball | Stainless Steel | ASTM A276 Type 316 / ASTM A 351 Gr. CF8M | 1 |
| 3 | Thrust Washer | PTFE 35% Carbon Filled | – – – | 1 |
| 4 | Stem | Stainless Steel | ASTM A276 Type 316 | 1 |
| 5 | Packing Ring | PTFE 35% Carbon Filled | – – – | 2 |
| 6 | Gland | Stainless Steel | ASTM A276 Type 304 | 1 |
| 7 | Cup Washer | Stainless Steel | ASTM A276 Type 304 | 2 |
| 8 | Nut | H.T. Steel | ASTM A 194 Gr. 2H | 2 |
| 9 | Spring Washer | Spring Steel | EN 47 Gr. B | 1 |
| 10 | Lever | Carbon Steel | – – – | 1 |
| 11 | Body Seat Ring | PTFE | – – – | 2 |
| 12 | Gasket | PTFE | – – – | 2 |
| 13 | Spring Washer | Spring Steel | EN 47 Gr. B | 8 |
| 14 | Studs | Alloy Steel | ASTM A 193 Gr. B7 | 4 |
| 15 | Nuts | H.T Steel | ASTM A 194 Gr. 2H | 8 |
| 16 | End Connector | Stainless Steel | ASTM A 351 Gr. CF8M | 2 |

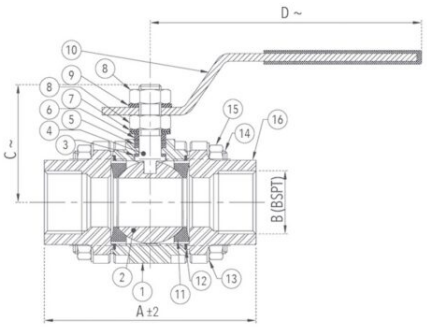


## Sizes / Dimensions

| Size (Inches) | Size (mm) | A ±2 | B | C ~ | D ~ |
|---|---|---|---|---|---|
| 1/2 | 15 | 69 | 1/2″ | 38 | 112 |
| 3/4 | 20 | 73 | 3/4″ | 40 | 125 |
| 1 | 25 | 95 | 1″ | 57 | 168 |
| 1 1/4 | 32 | 105 | 1 1/4″ | 65 | 168 |
| 1 1/2 | 40 | 115 | 1 1/2″ | 75 | 177 |
| 2 | 50 | 128 | 2″ | 80 | 220 |

~ ±10

ZOLOTO INDUSTRIES
Zoloto House, 11th Milestone, Lambra, Nakodar Road,
Jalandhar – 144026. Punjab. INDIA
https://www.zolotovalves.com
Phones : +91 181 4676666 (100 Lines)
Facsimile: +91 181 2792500 & 2251600
Email : sales@zolotovalves.com, mktg@zolotovalves.com

ZOLOTO®
VALVES
since 1966

AN ISO 9001 CERTIFIED COMPANY

# 1080B Stainless Steel (CF8M / S.S 316) Three Piece Design Ball Valve, Class-150 (Flanged)

## Salient Features

- Design Standard BS EN ISO 17292 (BS 5351).
- Flanged Ends to ASME B B16.5 Class – 150 (Drilled).
- Three Piece Design.
- Superb in Quality and Performance.

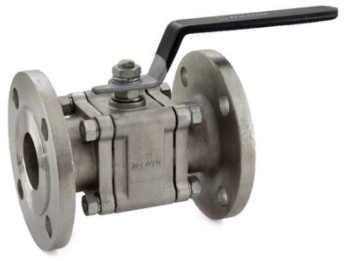

Test Pressure (Hydrostatic) :
Shell : 31 kg/cm²g (440 psig)
Maximum Working Pressure : 21 kg/cm²g (300 psig)
Seat (Pneumatic) : 7 kg/cm²g (100 psig)
Maximum Working Temperature : 220°C

**Suitable For**
Steam, Water, Oil, Air, Gases

## Materials

| P.No. | Name of Part | Material of Construction | Specification | Qty. |
|---|---|---|---|---|
| 1 | Body | Stainless Steel | ASTM A 351 Gr. CF8M | 1 |
| 2 | Ball | Stainless Steel | ASTM A 276 Type 316 / ASTM A 351 Gr. CF8M | 1 |
| 3 | Thrust Washer | PTFE 35% Carbon Filled | – – – | 1 |
| 4 | Stem | Stainless Steel | ASTM A 276 Type 316 | 1 |
| 5 | Packing Ring | PTFE 35% Carbon Filled | – – – | 2 |
| 6 | Gland | Stainless Steel | ASTM A 276 Type 316 | 1 |
| 7 | Cup Washer | Stainless Steel | AISI A276 Type 316 | 2 |
| 8 | Nut | H.T. Steel | ASTM A 194 Gr. 2H | 2 |
| 9 | Spring Washer | Spring Steel | EN 47 Gr. B | 1 |
| 10 | Lever | Carbon Steel | – – – | 1 |
| 11 | Body Seat Ring | PTFE | – – – | 2 |
| 12 | Gasket | PTFE | – – – | 2 |
| 13 | Spring Washer | Spring Steel | EN 47 Gr. B | 8 |
| 14 | Studs | Alloy Steel | ASTM A 193 Gr. B7 | 4 |
| 15 | Nuts | H.T Steel | ASTM A 194 Gr. 2H | 8 |
| 16 | End Connector | Stainless Steel | ASTM A 351 Gr. CF8M | 2 |

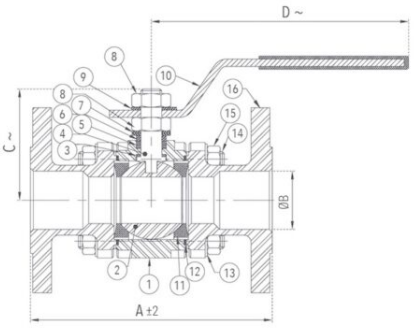


## Sizes / Dimensions

| Size (Inches) | Size (mm) | A ±2 | B | C ~ | D ~ |
|---|---|---|---|---|---|
| 1/2 | 15 | 108 | 15 | 38 | 150 |
| 3/4 | 20 | 117 | 20 | 40 | 150 |
| 1 | 25 | 127 | 25 | 57 | 160 |
| 1 1/4 | 32 | 140 | 32 | 65 | 160 |
| 1 1/2 | 40 | 165 | 40 | 75 | 202 |
| 2 | 50 | 178 | 50 | 75 | 202 |
| 2 1/2* | 65 | 191 | 63.5 | 125 | 250 |
| 3* | 80 | 203 | 76 | 137 | 335 |
| 4* | 100 | 229 | 100 | 158 | 335 |

~ ±10
*Full Bore

ZOLOTO INDUSTRIES
Zoloto House, 11th Milestone, Lambra, Nakodar Road,
Jalandhar – 144026. Punjab. INDIA
https://www.zolotovalves.com
Phones : +91 181 4676666 (100 Lines)
Facsimile: +91 181 2792500 & 2251600
Email : sales@zolotovalves.com, mktg@zolotovalves.com

ZOLOTO®
VALVES
since 1966

AN ISO 9001 CERTIFIED COMPANY

# 1081 Stainless Steel (CF8 / S.S 304) Three Piece Design Ball Valve, Class-150 (Screwed)

## Salient Features

- Design Standard BS EN ISO 17292 (BS 5351).
- Screwed Female Ends to BSPT / NPT / Socket Weld.
- Reduced Bore, Three Piece Design.
- Superb in Quality and Performance.

Test Pressure (Hydrostatic) :
Shell : 31 kg/cm²g (440 psig)
Maximum Working Pressure : 21 kg/cm²g (300 psig)
Seat (Pneumatic) : 7kg/cm²g (100 psig)
Maximum Working Temperature : 220°C

**Suitable For**
Steam, Water, Oil, Air, Gases

## Materials

| P.No. | Name of Part | Material of Construction | Specification | Qty. |
|---|---|---|---|---|
| 1 | Body | Stainless Steel | ASTM A 351 Gr. CF8 | 1 |
| 2 | Ball | Stainless Steel | ASTM A276 Type 304 / ASTM A 351 Gr. CF8 | 1 |
| 3 | Thrust Washer | PTFE 35% Carbon Filled | – – – | 1 |
| 4 | Stem | Stainless Steel | ASTM A276 Type 316 | 1 |
| 5 | Packing Ring | PTFE 35% Carbon Filled | – – – | 2 |
| 6 | Gland | Stainless Steel | ASTM A276 Type 304 | 1 |
| 7 | Cup Washer | Stainless Steel | ASTM A276 Type 304 | 2 |
| 8 | Nut | H.T Steel | ASTM A 194 Gr. 2H | 2 |
| 9 | Spring Washer | Spring Steel | EN 47 Gr. B | 1 |
| 10 | Lever | Carbon Steel | – – – | 1 |
| 11 | Body Seat Ring | PTFE | – – – | 2 |
| 12 | Gasket | PTFE | – – – | 2 |
| 13 | Spring Washer | Spring Steel | EN 47 Gr. B | 8 |
| 14 | Studs | Alloy Steel | ASTM A 193 Gr. B7 | 4 |
| 15 | Nuts | H.T Steel | ASTM A 194 Gr. 2H | 8 |
| 16 | End Connector | Stainless Steel | ASTM A 351 Gr. CF8 | 2 |

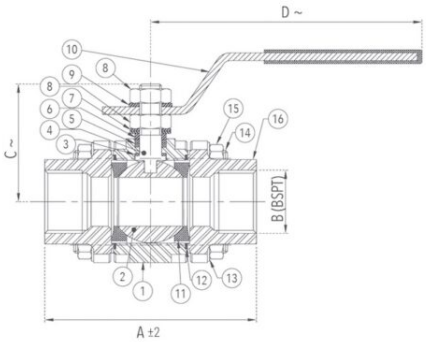


## Sizes / Dimensions

| Size (Inches) | Size (mm) | A ±2 | B | C ~ | D ~ |
|---|---|---|---|---|---|
| 1/2 | 15 | 69 | 1/2″ | 38 | 112 |
| 3/4 | 20 | 73 | 3/4″ | 40 | 125 |
| 1 | 25 | 95 | 1″ | 57 | 168 |
| 1 1/4 | 32 | 105 | 1 1/4″ | 65 | 168 |
| 1 1/2 | 40 | 115 | 1 1/2″ | 75 | 177 |
| 2 | 50 | 128 | 2″ | 80 | 220 |

~ ±10

ZOLOTO INDUSTRIES
Zoloto House, 11th Milestone, Lambra, Nakodar Road,
Jalandhar – 144026. Punjab. INDIA
https://www.zolotovalves.com
Phones : +91 181 4676666 (100 Lines)
Facsimile: +91 181 2792500 & 2251600
Email : sales@zolotovalves.com, mktg@zolotovalves.com

ZOLOTO®
VALVES
since 1966

AN ISO 9001 CERTIFIED COMPANY

# 1081A Stainless Steel (CF8 / S.S-304) Three Piece Design Ball Valve, Class-150 (Flanged)

## Salient Features

- Design Standard BS EN ISO 17292 (BS 5351).
- Flanged Ends to ASME B B16.5 Class-150 (Drilled).
- Three Piece Design.
- Superb in Quality and Performance.

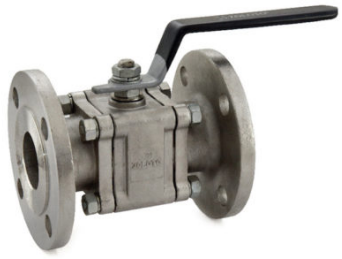

Test Pressure (Hydrostatic) :
Shell : 31 kg/cm²g (440 psig)
Maximum Working Pressure : 21 kg/cm²g (300 psig)
Seat (Pneumatic) : 7 kg/cm²g (100 psig)
Maximum Working Temperature : 220°C

**Suitable For**
Steam, Water, Oil, Air, Gases

## Materials

| P.No. | Name of Part | Material of Construction | Specification | Qty. |
|---|---|---|---|---|
| 1 | Body | Stainless Steel | ASTM A 351 Gr. CF8 | 1 |
| 2 | Ball | Stainless Steel | ASTM A 276 Type 304 / ASTM A 351 Gr. CF8 | 1 |
| 3 | Thrust Washer | PTFE 35% Carbon Filled | – – – | 1 |
| 4 | Stem | Stainless Steel | ASTM A 276 Type 316 | 1 |
| 5 | Packing Ring | PTFE 35% Carbon Filled | – – – | 2 |
| 6 | Gland | Stainless Steel | ASTM A 276 Type 304 | 1 |
| 7 | Cup Washer | Stainless Steel | AISI A276 Type 304 | 2 |
| 8 | Nut | H.T Steel | ASTM A 194 Gr. 2H | 2 |
| 9 | Spring Washer | Spring Steel | EN 47 Gr. B | 1 |
| 10 | Lever | Carbon Steel | – – – | 1 |
| 11 | Body Seat Ring | PTFE | – – – | 2 |
| 12 | Gasket | PTFE | – – – | 2 |
| 13 | Spring Washer | Spring Steel | EN 47 Gr. B | 8 |
| 14 | Studs | Alloy Steel | ASTM A 193 Gr. B7 | 4 |
| 15 | Nuts | H.T Steel | ASTM A 194 Gr. 2H | 8 |
| 16 | End Connector | Stainless Steel | ASTM A 351 Gr. CF8 | 2 |

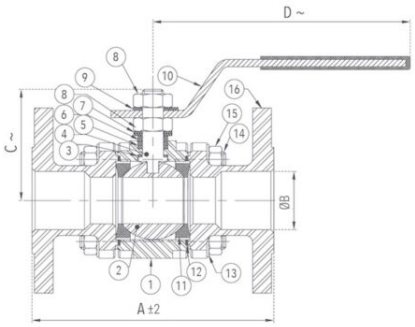


## Sizes / Dimensions

| Size (Inches) | Size (mm) | A ±2 | B | C ~ | D ~ |
|---|---|---|---|---|---|
| 1/2 | 15 | 108 | 15 | 38 | 150 |
| 3/4 | 20 | 117 | 20 | 40 | 150 |
| 1 | 25 | 127 | 25 | 57 | 160 |
| 1 1/4 | 32 | 140 | 32 | 65 | 160 |
| 1 1/2 | 40 | 165 | 40 | 75 | 202 |
| 2 | 50 | 178 | 50 | 80 | 202 |
| 2 1/2* | 65 | 191 | 63.5 | 125 | 250 |
| 3* | 80 | 203 | 76 | 137 | 335 |
| 4* | 100 | 229 | 100 | 158 | 335 |

~ ±10
*Full Bore

ZOLOTO INDUSTRIES
Zoloto House, 11th Milestone, Lambra, Nakodar Road,
Jalandhar – 144026. Punjab. INDIA
https://www.zolotovalves.com
Phones : +91 181 4676666 (100 Lines)
Facsimile: +91 181 2792500 & 2251600
Email : sales@zolotovalves.com, mktg@zolotovalves.com

ZOLOTO®
VALVES
since 1966

AN ISO 9001 CERTIFIED COMPANY

# 1088 Cast Steel Three Piece Design Ball Valve, Class-150 (Screwed) I.B.R

## Salient Features

- Design Standard BS EN ISO 17292 (BS 5351).
- Screwed Female Ends to BSPT / NPT / Socket Weld.
- Reduced Bore, Three Piece Design.
- Superb in Quality and Performance.

Test Pressure (Hydrostatic) :
Shell : 31 kg/cm²g (440psig)
Seat : 21kg/cm²g (300 psig)
Seat (Steam) : 10.55 kg/cm²g (150 psig)
Maximum Working Temperature : 220°C

**Suitable For**
Steam, Water, Oil

## Materials

| P.No. | Name of Part | Material of Construction | Specification | Qty. |
|---|---|---|---|---|
| 1 | Body | Cast Steel | ASTM A 216 Gr. WCB | 1 |
| 2 | Ball | Stainless Steel | ASTM A 276 Type 304 / ASTM A 351 Gr. CF8 | 1 |
| 3 | Thrust Washer | PTFE 35% Carbon Filled | – – – | 1 |
| 4 | Stem | Stainless Steel | ASTM A 276 Type 316 | 1 |
| 5 | Packing Ring | PTFE 35% Carbon Filled | – – – | 2 |
| 6 | Gland | Stainless Steel | ASTM A 276 Type 304 | 1 |
| 7 | Cup Washer | Stainless Steel | ASTM A 276 Type 304 | 2 |
| 8 | Nut | H.T Steel | ASTM A 194 Gr. 2H | 2 |
| 9 | Spring Washer | Spring Steel | EN 47 Gr. B | 1 |
| 10 | Lever | Carbon Steel | – – – | 1 |
| 11 | Body Seat Ring | PTFE | – – – | 2 |
| 12 | Gasket | PTFE | – – – | 2 |
| 13 | Spring Washer | Spring Steel | EN 47 Gr. B | 8 |
| 14 | Studs | Alloy Steel | ASTM A 193 Gr. B7 | 4 |
| 15 | Nuts | H.T Steel | ASTM A 194 Gr. 2H | 8 |
| 16 | End Connector | Cast Steel | ASTM A 216 Gr. WCB | 2 |

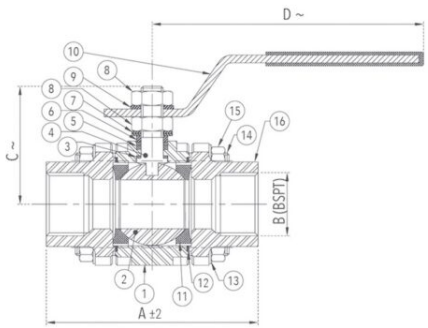


## Sizes / Dimensions

| Size (Inches) | Size (mm) | A ±2 | B | C ~ | D ~ |
|---|---|---|---|---|---|
| 1/2 | 15 | 69 | 1/2″ | 38 | 112 |
| 3/4 | 20 | 73 | 3/4″ | 40 | 125 |
| 1 | 25 | 95 | 1″ | 57 | 168 |
| 1 1/4 | 32 | 105 | 1 1/4″ | 65 | 168 |
| 1 1/2 | 40 | 115 | 1 1/2″ | 75 | 177 |
| 2 | 50 | 128 | 2″ | 80 | 220 |

~ ±10

ZOLOTO INDUSTRIES
Zoloto House, 11th Milestone, Lambra, Nakodar Road,
Jalandhar – 144026. Punjab. INDIA
https://www.zolotovalves.com
Phones : +91 181 4676666 (100 Lines)
Facsimile: +91 181 2792500 & 2251600
Email : sales@zolotovalves.com, mktg@zolotovalves.com

ZOLOTO®
VALVES
since 1966

AN ISO 9001 CERTIFIED COMPANY

# 1089 Cast Steel Three Piece Design Ball Valve, Class-150 (Flanged) I.B.R

## Salient Features

- Design Standard BS EN ISO 17292 (BS 5351).
- Flanged Ends to ANSI B16.5 Class-150 (Drilled).
- Three Piece Design.
- Superb in Quality and Performance.

Test Pressure (Hydrostatic) :
Shell : 31 kg/cm²g (440 psig)
Seat : 21kg/cm²g (30 psig)
Seat (Steam) : 10.55 kg/cm²g (150 psig)
Maximum Working Temperature : 220°C

**Suitable For**
Steam, Water, Oil

## Materials

| P.No. | Name of Part | Material of Construction | Specification | Qty. |
|---|---|---|---|---|
| 1 | Body | Cast Steel | ASTM A 216 Gr. WCB | 1 |
| 2 | Ball | Stainless Steel | ASTM A 276 Type 304 / ASTM A 351 Gr. CF8 | 1 |
| 3 | Thrust Washer | PTFE 35% Carbon Filled | – – – | 1 |
| 4 | Stem | Stainless Steel | ASTM A 276 Type 316 | 1 |
| 5 | Packing Ring | PTFE 35% Carbon Filled | – – – | 2 |
| 6 | Gland | Stainless Steel | ASTM A 276 Type 304 | 1 |
| 7 | Cup Washer | Stainless Steel | ASTM A 276 Type 304 | 2 |
| 8 | Nut | H.T Steel | ASTM A 194 Gr. 2H | 2 |
| 9 | Spring Washer | Spring Steel | EN 47 Gr. B | 1 |
| 10 | Lever | Carbon Steel | – – – | 1 |
| 11 | Body Seat Ring | PTFE | – – – | 2 |
| 12 | Gasket | PTFE | – – – | 2 |
| 13 | Spring Washer | Spring Steel | EN 47 Gr. B | 8 |
| 14 | Studs | Alloy Steel | ASTM A 193 Gr. B7 | 4 |
| 15 | Nuts | H.T Steel | ASTM A 194 Gr. 2H | 8 |
| 16 | End Connector | Cast Steel | ASTM A 216 Gr. WCB | 2 |

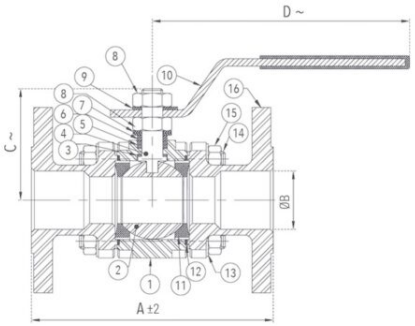


## Sizes / Dimensions

| Size (Inches) | Size (mm) | A ±2 | ØB | C ~ | D ~ |
|---|---|---|---|---|---|
| 1/2 | 15 | 108 | 15 | 38 | 150 |
| 3/4 | 20 | 117 | 20 | 40 | 150 |
| 1 | 25 | 127 | 25 | 57 | 160 |
| 1 1/4 | 32 | 140 | 32 | 65 | 160 |
| 1 1/2 | 40 | 165 | 40 | 75 | 202 |
| 2 | 50 | 178 | 50 | 80 | 202 |
| 2 1/2* | 65 | 191 | 63.5 | 125 | 250 |
| 3* | 80 | 203 | 76 | 137 | 335 |
| 4* | 100 | 229 | 100 | 158 | 335 |

~ ±10
*Full Bore

ZOLOTO INDUSTRIES
Zoloto House, 11th Milestone, Lambra, Nakodar Road,
Jalandhar – 144026. Punjab. INDIA
https://www.zolotovalves.com
Phones : +91 181 4676666 (100 Lines)
Facsimile: +91 181 2792500 & 2251600
Email : sales@zolotovalves.com, mktg@zolotovalves.com

ZOLOTO®
VALVES
since 1966

AN ISO 9001 CERTIFIED COMPANY

# 1094 Bronze Spring Loaded Safety Relief Valve, Open Discharge (Screwed)

## Salient Features

- Screwed Male End to IS 554 / BS 21 / ISO 7.
- Open Discharge Type.
- Metal to Rubber contact seating.

Test Pressure (Hydrostatic) :
Shell : 21.10 kg/cm²g (300 psig)
Seat : 10.55 kg/cm²g (150 psig)
Set Pressure Range : 0 – 10 kg/cm²g (Max.)
Maximum Working Temperature : 80°C

**Suitable For**
Water, Oil, Air

## Materials

| P.No. | Name of Part | Material of Construction | Specification | Qty. |
|---|---|---|---|---|
| 1 | Body | Bronze / Forged Brass | IS 318 Gr. LTB 2 / IS 6912 Gr. FLB | 1 |
| 2 | Disc | Bronze | IS 318 Gr. LTB 2 | 1 |
| 3 | Stem | Bronze | IS 318 Gr. LTB 2 | 1 |
| 4 | Spring | Spring Steel | EN 47 Gr. B | 1 |
| 5 | Spring Disc | Bronze | IS 318 Gr. LTB 2 | 1 |
| 6 | Chamber | Bronze | IS 318 Gr. LTB 2 | 1 |
| 7 | Check Nut | Bronze | IS 318 Gr. LTB 2 | 1 |
| 8 | Adjusting Screw | Bronze | IS 318 Gr. LTB 2 | 1 |
| 9 | Disc Facing | Nitrile Rubber | IS 5192 – 1 | 1 |
| 10 | Guide | Bronze | IS 318 Gr. LTB 2 | 1 |
| 11 | Nut | Brass | – – – | 1 |
| 12 | Split Pin | Brass | – – – | 1 |

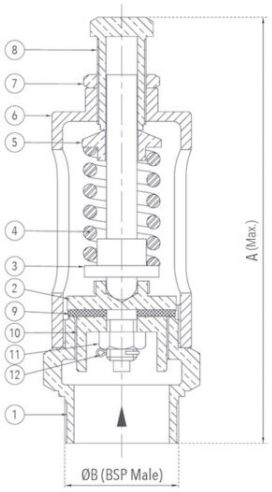


## Sizes / Dimensions

| Size (Inches) | Size (mm) | A (Max.) | B |
|---|---|---|---|
| 1/2* | 15* | 170 | 1/2″ |
| 3/4* | 20* | 170 | 3/4″ |
| 1* | 25* | 190 | 1″ |
| 1 1/4 | 32 | 203 | 1 1/4″ |
| 1 1/2 | 40 | 225 | 1 1/2″ |
| 2 | 50 | 265 | 2″ |

* For size 15, 20 & 25 the body is of Forged Brass
NOTE : Also available in Metal to Metal contact seating.

ZOLOTO INDUSTRIES
Zoloto House, 11th Milestone, Lambra, Nakodar Road,
Jalandhar – 144026. Punjab. INDIA
https://www.zolotovalves.com
Phones : +91 181 4676666 (100 Lines)
Facsimile: +91 181 2792500 & 2251600
Email : sales@zolotovalves.com, mktg@zolotovalves.com

ZOLOTO®
VALVES
since 1966

AN ISO 9001 CERTIFIED COMPANY

# 1094A Bronze Spring Loaded Safety Relief Valve, Enclosed Discharge (Screwed)

## Salient Features

- Screwed Male End to IS 554 / BS 21 / ISO7.
- Enclosed Discharge Type.
- Metal to Rubber contact seating.

Test Pressure (Hydrostatic) :
Shell : 21.10 kg/cm²g (300 psig)
Seat : 10.55 kg/cm²g (150 psig)
Set Pressure Range : 0-10 kg/cm²g (Max.)
Maximum Working Temperature : 80°C

**Suitable For**
Water, Oil, Air

## Materials

| P.No. | Name of Part | Material of Construction | Specification | Qty. |
|---|---|---|---|---|
| 1 | Body | Bronze / Forged Brass | IS 318 Gr. LTB 2 / IS 6912 Gr. FLB | 1 |
| 2 | Disc | Bronze | IS 318 Gr. LTB 2 | 1 |
| 3 | Stem | Bronze | IS 318 Gr. LTB 2 | 1 |
| 4 | Spring | Spring Steel | EN 47 Gr. B | 1 |
| 5 | Spring Disc | Bronze | IS 318 Gr. LTB 2 | 1 |
| 6 | Chamber | Bronze | IS 318 Gr. LTB 2 | 1 |
| 7 | Check Nut | Bronze | IS 318 Gr. LTB 2 | 1 |
| 8 | Adjusting Screw | Bronze | IS 318 Gr. LTB 2 | 1 |
| 9 | Disc Facing | Nitrile Rubber | IS 5192 – 1 | 1 |
| 10 | Guide | Bronze | IS 318 Gr. LTB 2 | 1 |
| 11 | Nut | Brass | – – – | 1 |
| 12 | Split Pin | Brass | – – – | 1 |

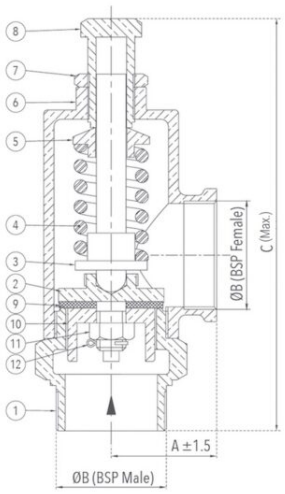


## Sizes / Dimensions

| Size (Inches) | Size (mm) | A ±1.5 | B | C ~ |
|---|---|---|---|---|
| 1/2* | 15* | 33 | 1/2″ | 170 |
| 3/4* | 20* | 38.5 | 3/4″ | 170 |
| 1* | 25* | 45 | 1″ | 190 |
| 1 1/4 | 32 | 45 | 1 1/4″ | 203 |
| 1 1/2 | 40 | 47.5 | 1 1/2″ | 225 |
| 2 | 50 | 57 | 2″ | 265 |

* For size 15, 20 & 25 the body is of Forged Brass
NOTE : Also available in Metal to Metal contact seating.

ZOLOTO INDUSTRIES
Zoloto House, 11th Milestone, Lambra, Nakodar Road,
Jalandhar – 144026. Punjab. INDIA
https://www.zolotovalves.com
Phones : +91 181 4676666 (100 Lines)
Facsimile: +91 181 2792500 & 2251600
Email : sales@zolotovalves.com, mktg@zolotovalves.com